ASSEMBLY INSTRUCTION

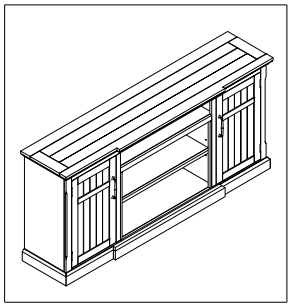

HARDWARE LIST

NO	SKETCH	HARDWARE	QTY
1		Screw Ø6 x 5/8"	70 pcs
2		Screw Ø8 x 1 1/4"	31 pcs
3		Pin Shelf	20 pcs
4		Elbow Plate	13 pcs
5		center leg	2 pcs
		Fireplace (not included)	

Philip Headscrew Driver (not included)

PART LIST

NO	DESCRIPTION	SKETCH	QTY
A	Top		1 Pc
B	Front Frame		1 Pc
C	Side Panel-A		1 Pc
D	Side Panel-B		1 Pc
E	Parition-A		1 Pc
F	Parition-B		1 Pc

NO	DESCRIPTION	SKETCH	QTY
G	Bottom Panel		1 Pc
H	Back Panel		1 Pc
I	Fixed Shelf		1 Pc
J	Adj. Shelf-A		1 Pc
K	Adj. Shelf-B		2 Pcs
L	Support Fireplace		2 Pcs

ASSEMBLY STEP

STEP 1

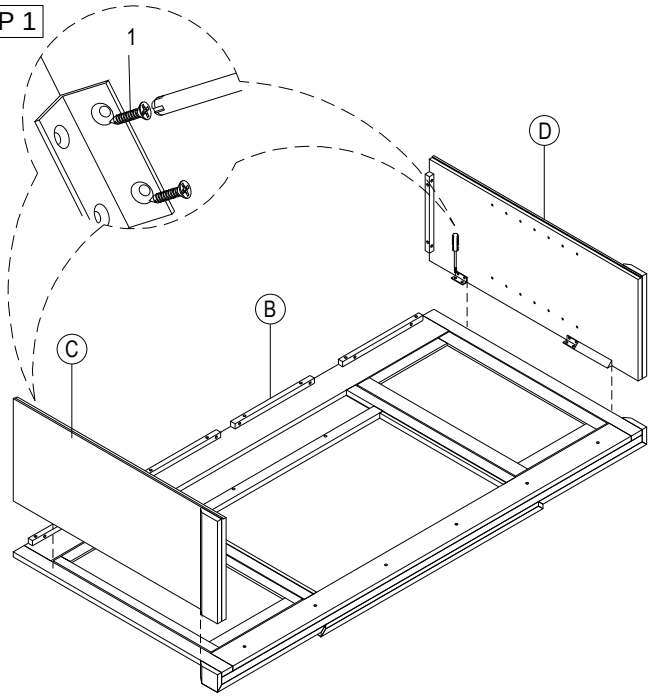

STEP 2

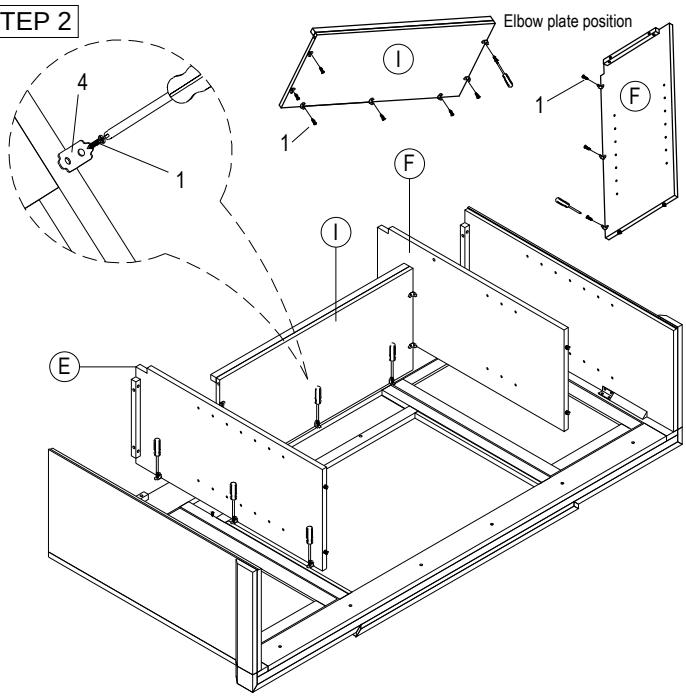

STEP 3

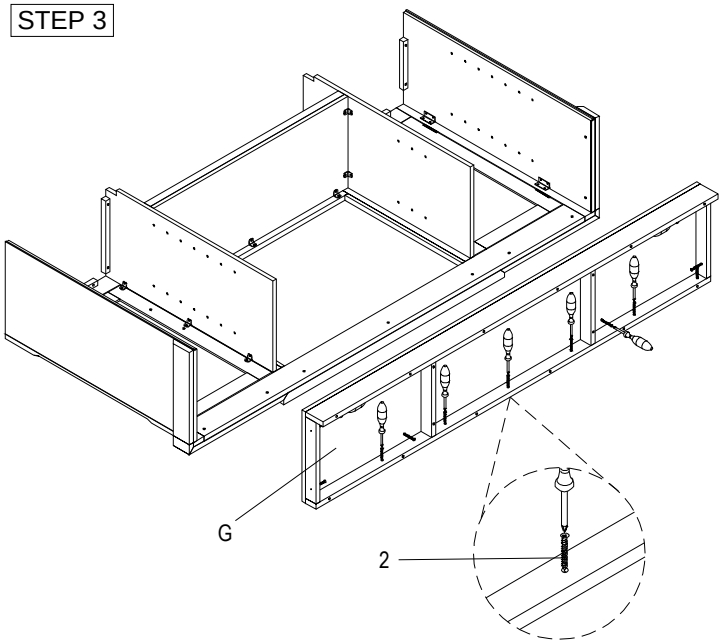
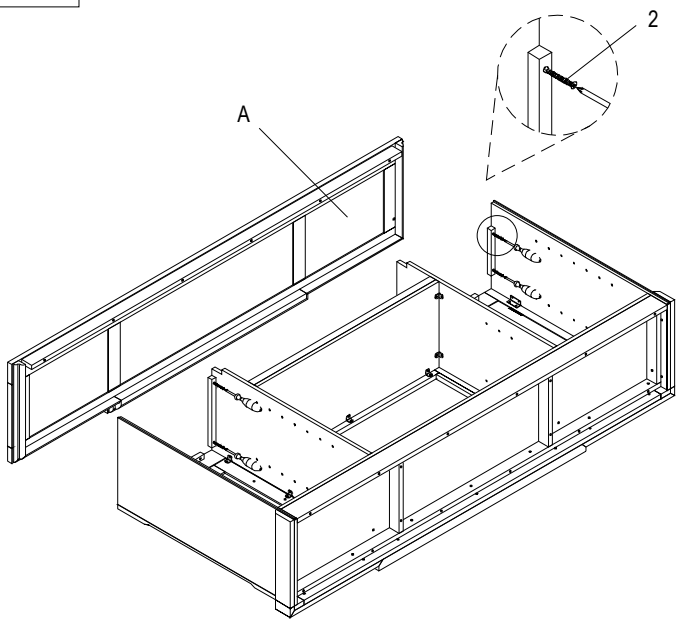
STEP 4