# ASSEMBLY INSTRUCTIONS

PROGRESSIVE® furniture

**ITEM NO: T640-29**
**Chairside Table**

**Thank you for purchasing this quality product. Be sure to check all packing material carefully for small parts that may have come loose inside the carton during shipment, clarify and count all parts and compare with the parts list below. Do not completety tighten until the item has been fully assembled.**

## STEP 1

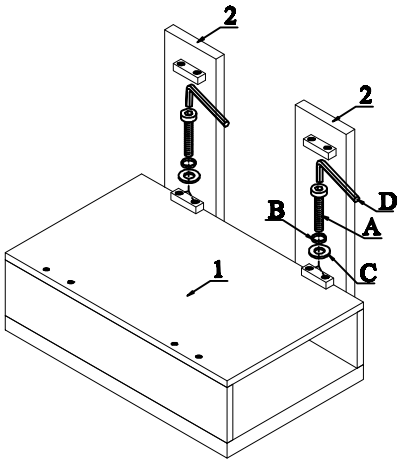


## STEP 2

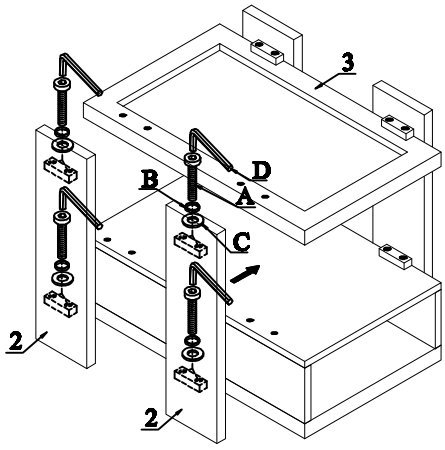


## COMPLETE

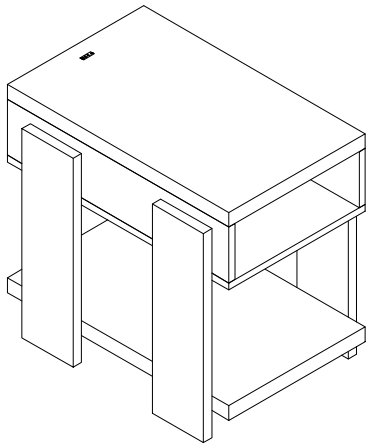

| HARDWARE LIST | | | | |
|---|---|---|---|---|
| No. | Description | Sketch | Size | Quantity |
| A | Allen Bolt | | Ø1/4"*1-1/4" | 16 pcs |
| B | Spring Washer | | Ø1/4" | 16 pcs |
| C | Flar Washer | | Ø1/4" | 16 pcs |
| D | Allen Key | | M4 | 1 pc |

| PARTS LIST | | | |
|---|---|---|---|
| No. | Description | Sketch | Quantity |
| 1 | Top panel | | 1 pc |
| 2 | Legs | | 4 pcs |
| 3 | Bottom panel | | 1 pc |

Cleaning instruction:Clean the table surface with a furniture polish and a soft cloth

**Made In Vietnam**