Progressive ®
furniture

ASSEMBLE INSTRUCTION

Model No : T250-01 COCKTAIL TABLE

IMPORTANT NOTE:

- Place all wooden parts on a clean and smooth surface such as a rug or carpet to avoid the parts from being scratched.
- Check to be such that you have all parts and hardware.
- Remove all wrapping materials, including staples & packing straps before you start to assemble.
- Do not tighten all screws / bolts until all completely assembled.
- Keep all hardware parts out of reach of children.

PART LIST			
NO	DESCRIPTION		QTY/PCS
1		TABLE TOP	1 PC
2		TABLE LEG	3 PC

PART LIST			
NO	DESCRIPTION		QTY/PCS
A		BOLT M6 x 35MM	3 PC
B		ALLEN KEY M4 x 60MM	1 PC
C		SPRING WASHER M6 x 12MM	3 PC
D		FLAT WASHER M6 x 19MM	3 PC
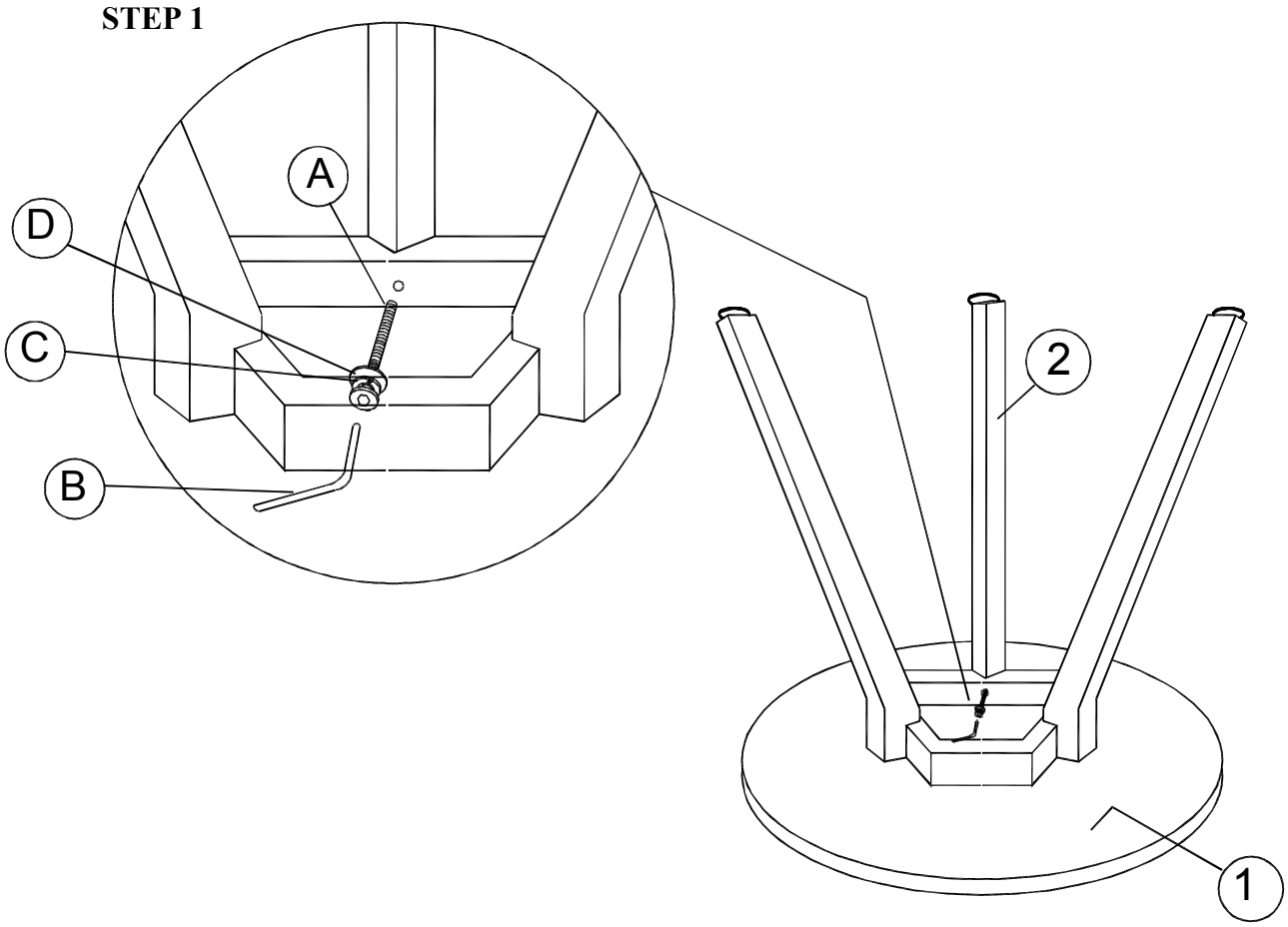
STEP 1