ASSEMBLY INSTRUCTIONS
ITEM NO:P344-01 Castered Rect.Co Cktail Table

Thank you for purchasing this quality product. Be sure to check all packing material carefully for small parts that may have come loose inside the carton during shipment.

Parts List

NO	SKETCH	DESCRIPTION	QTY
#1		End Table Top	1PC
#2		Middle Pannel	1PC
#3		Base Pannel	1PC
#4		Leg	4PCS
#5		Glass	1PC

Hardware List

NO	SKETCH	DESCRIPTION	QTY
A		Allen Bolt 1/4"x1-3/4"	4pcs
B		Allen Bolt 1/4"x1"	4pcs
C		Allen Bolt 1/4"x1/2"	4pcs
D		Spring Washer 1/4"	12pcs
E		Flat Washer 1/4"x16mm	12pcs
F		Bracket	4pcs
G		Allen Key 4mm	1pc
H		Rubber Cover	4pcs
I		Caster	4pcs
J		Wood Screw 6*12mm	16pcs

Do not tighten any bolts until all the bolts have been loosely installed.

Step 1

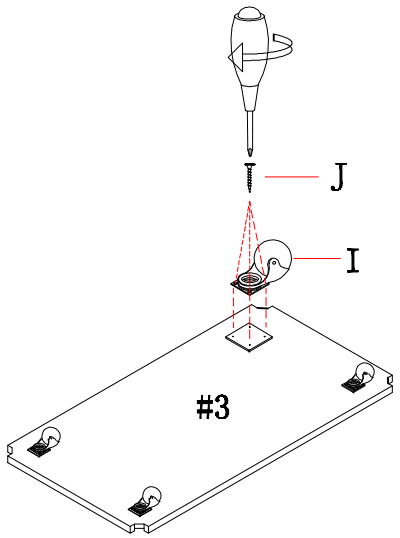

Step 2

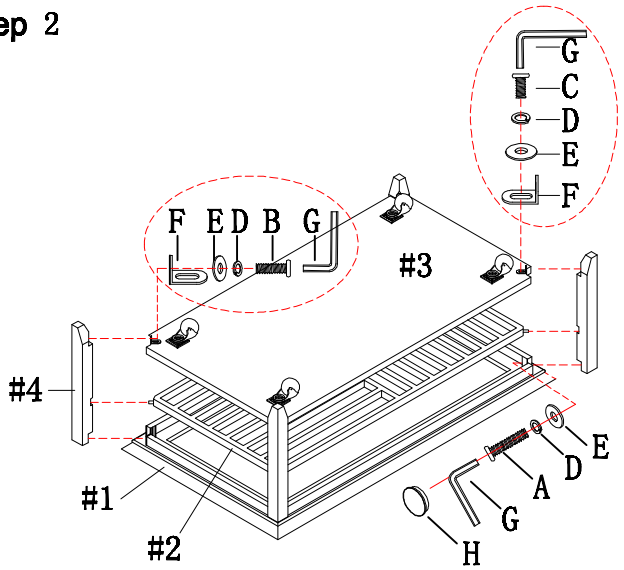

Step 3

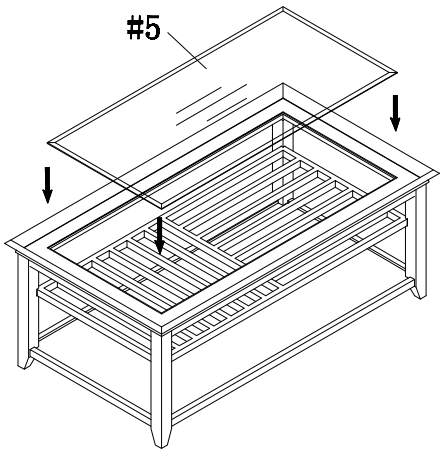

Step 4

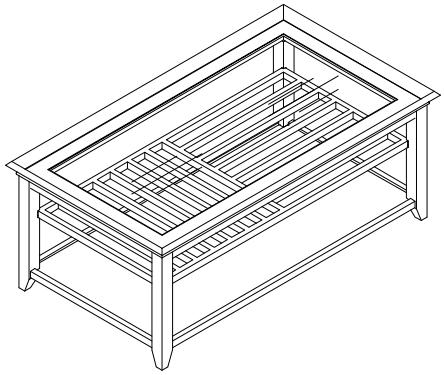

MADE IN CHINA