ASSEMBLY INSTRUCTIONS

MODEL NO:# P109-14 CHEST

E		Mounting Bracket	2PCS
F		Nylon Restraint	1PC
G		Long screw	1PC
H		Short screw	1PC
I		Plastic wall anchor	1PC

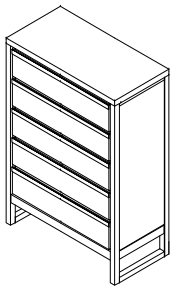

NOTE: ANTI-TIPPING KIT INSTRUCTIONS:
REFER TO KIT'S BAG

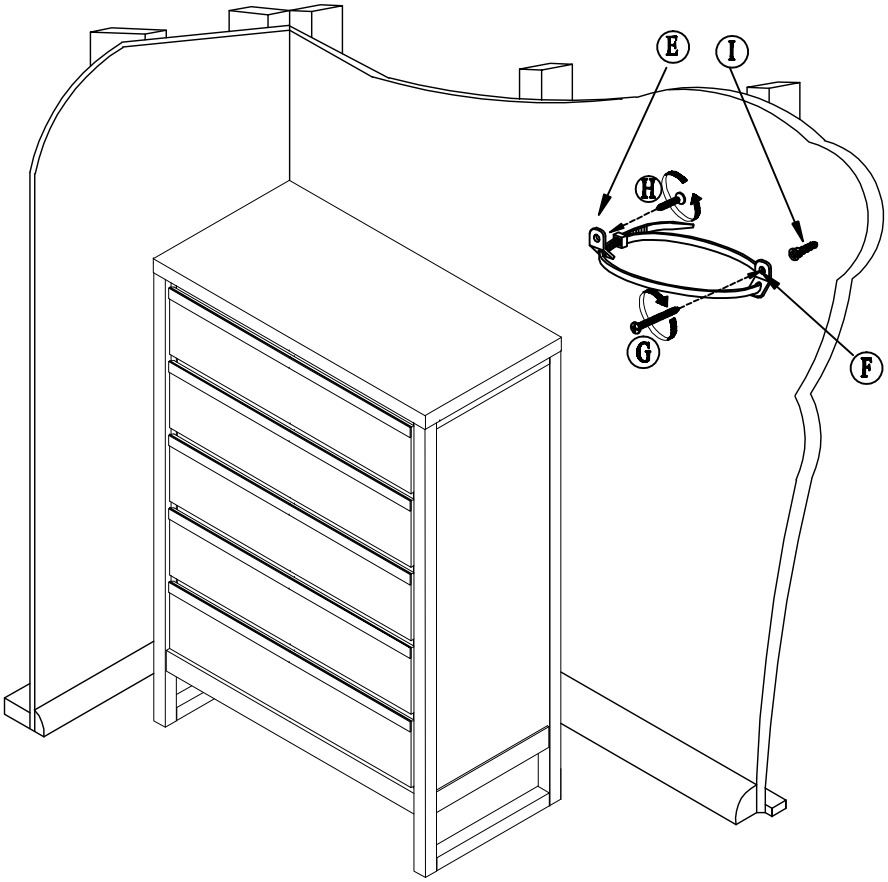

← MADE IN VIET NAM →