Thank you for choosing a **PALACE IMPORTS** product.
Your total satisfaction is our #1 priority.

Customer Service and Warranty Information

- Should you have a problem or need more information concerning the warranty, **do not contact the place of purchase. Please email our customer service department for immediate assistance at info@palaceimportsinc.com or go to** www.palaceimportsinc.com

- PALACE IMPORTS products are warranted to the original purchaser against defects in material or workmanship in the furniture. Defects as mentioned in this warranty refer to any imperfections which may impair the use of the product. Our warranty is expressly limited to the replacement of furniture parts and components for one year following the date of purchase.

- PALACE IMPORTS will replace any part that is defective. This warranty applies under conditions of normal use. Our furniture products are not intended for outdoor use. The warranty does not cover defects caused by improper assembly or disassembly, defects occurring after purchase due to product modifications, intentional damage, accident, misuse, exposure to the elements and labor or assembly costs.

- PALACE IMPORTS reserves the right to request proof of purchase to document a warranty claim. In no event shall PALACE IMPORTS be liable for incidental or consequent damages resulting from the misuse of the product.

Palace Imports
100% Wood Furniture

ASSEMBLY INSTRUCTIONS
RESTON FULL BED

SKU 1441 - White
SKU 1442 - Mahogany
SKU 1443 - Mocha
SKU 1444 - Honey Pine
SKU 1446 - Java

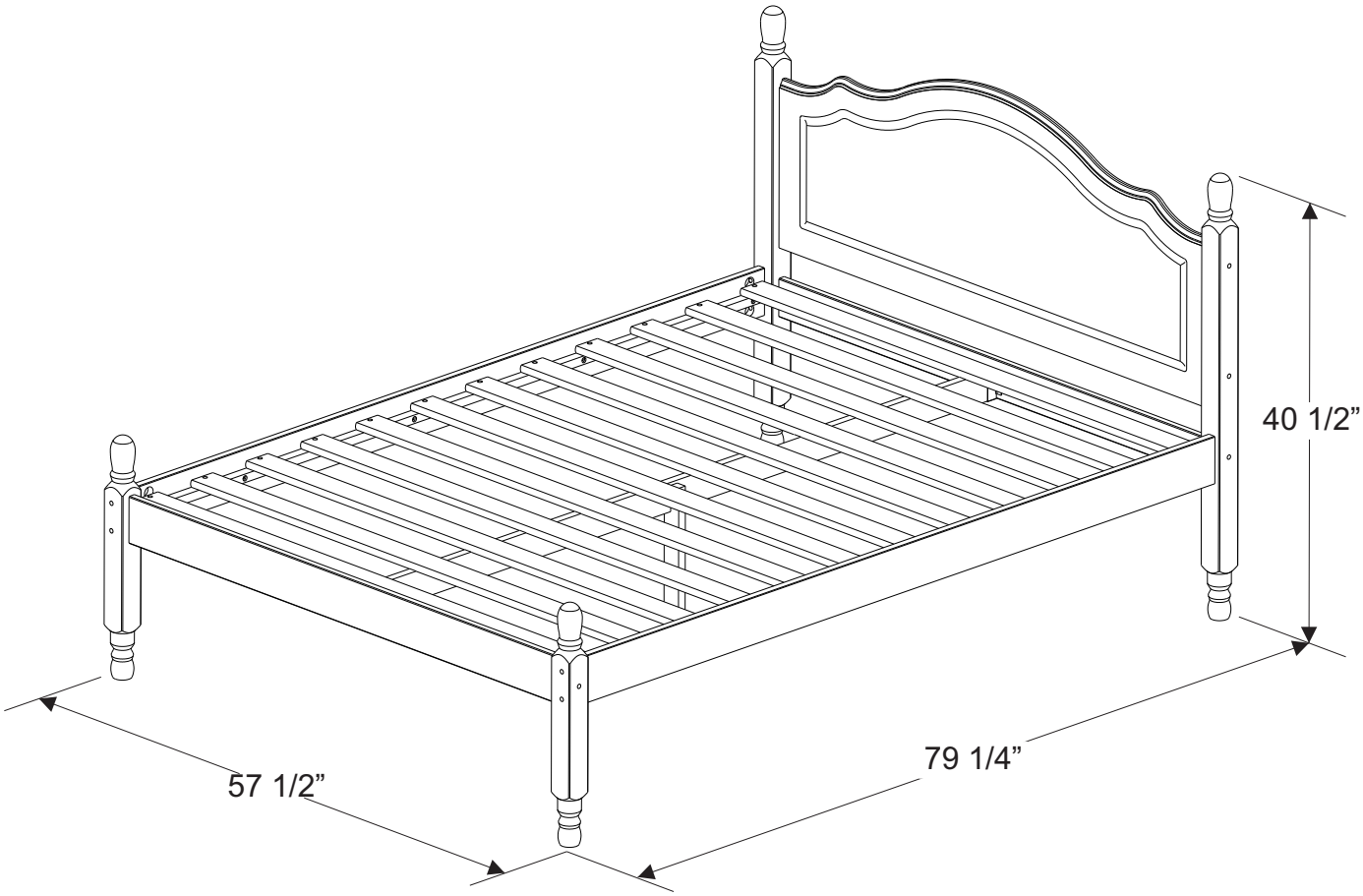

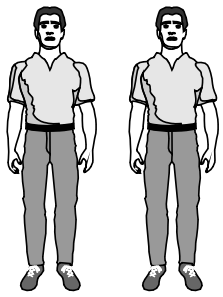

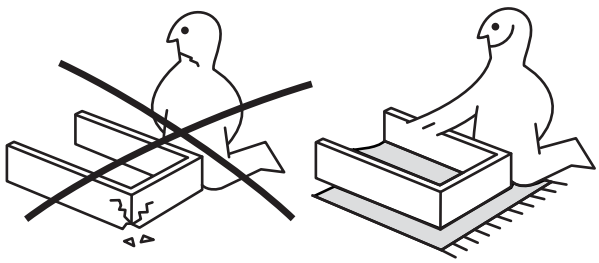

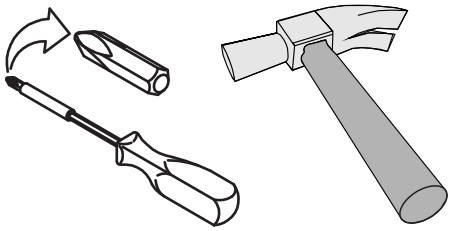

PRE-ASSEMBLY PREPARATION

- Please check the contents before assembling. A full checklist of parts is provided below.
- If any parts are missing or damaged, please contact us at info@PalaceImportsInc.com
- Assemble on a flat, smooth surface on top of a blanket.
- Use only low-speed power drill setting.
- Assemble as near as possible to the point of use.
- The hardware pack contains SMALL ITEMS which should be KEPT AWAY FROM YOUNG CHILDREN.

PARTS DIAGRAM

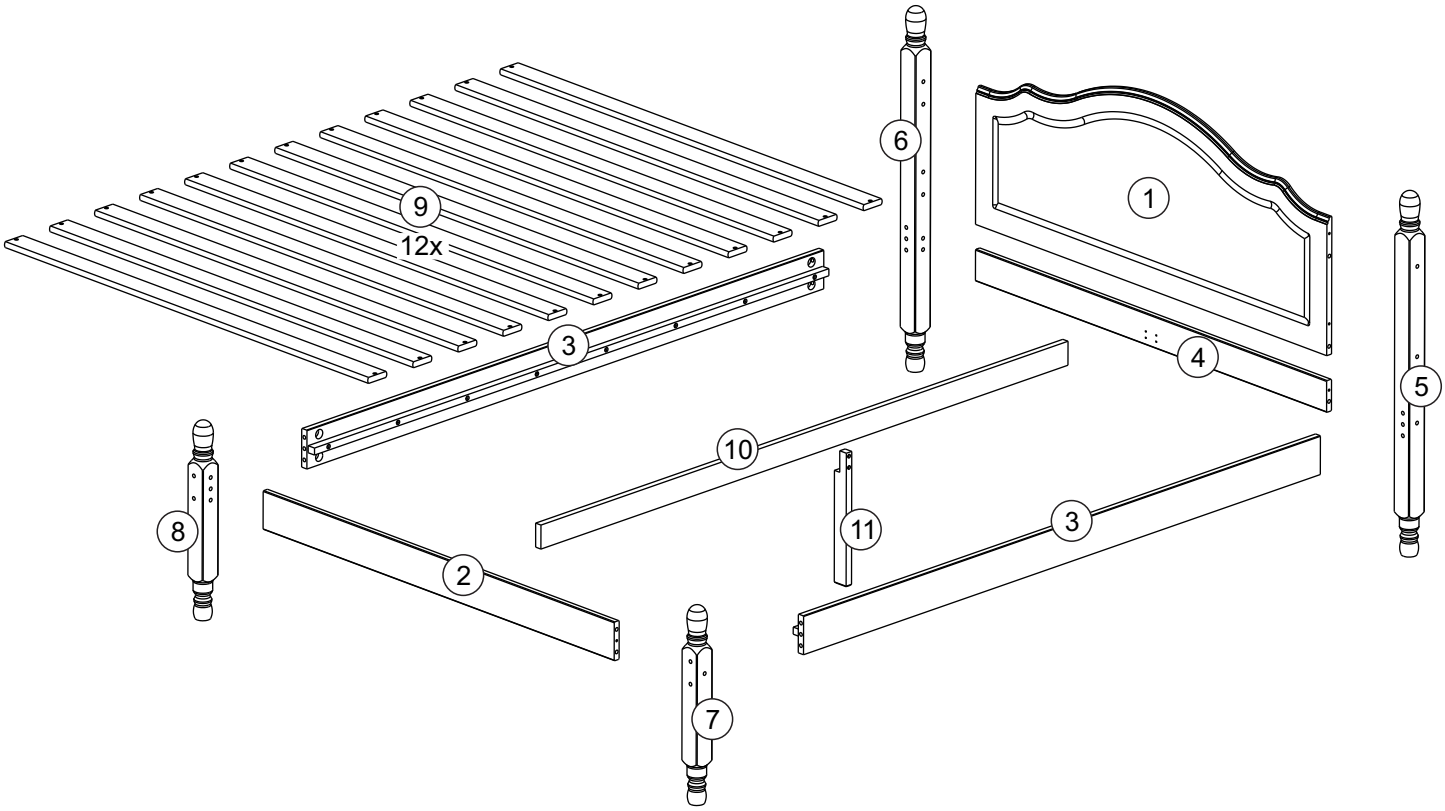

SCREWS ARE SHOWN IN ACTUAL SIZE

A9	3,5x16	10 + 1
A10	3,5x30	26 + 1
B1	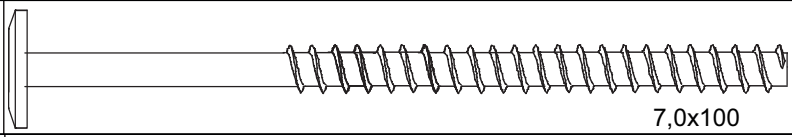 7,0x100	08
B5	1/4"	08 + 1
B12	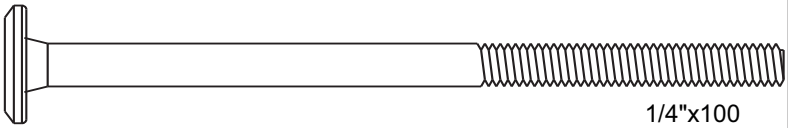 1/4"x100	08
C3	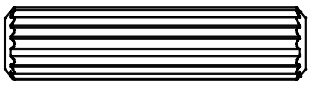 10x40	14 + 1
D8	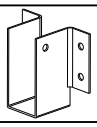 20x50	02
G3		01
G4	96mm	02

WARNING:
CHOKING HAZARD

Small Parts.
Not For Children Under 3 Years.

01)

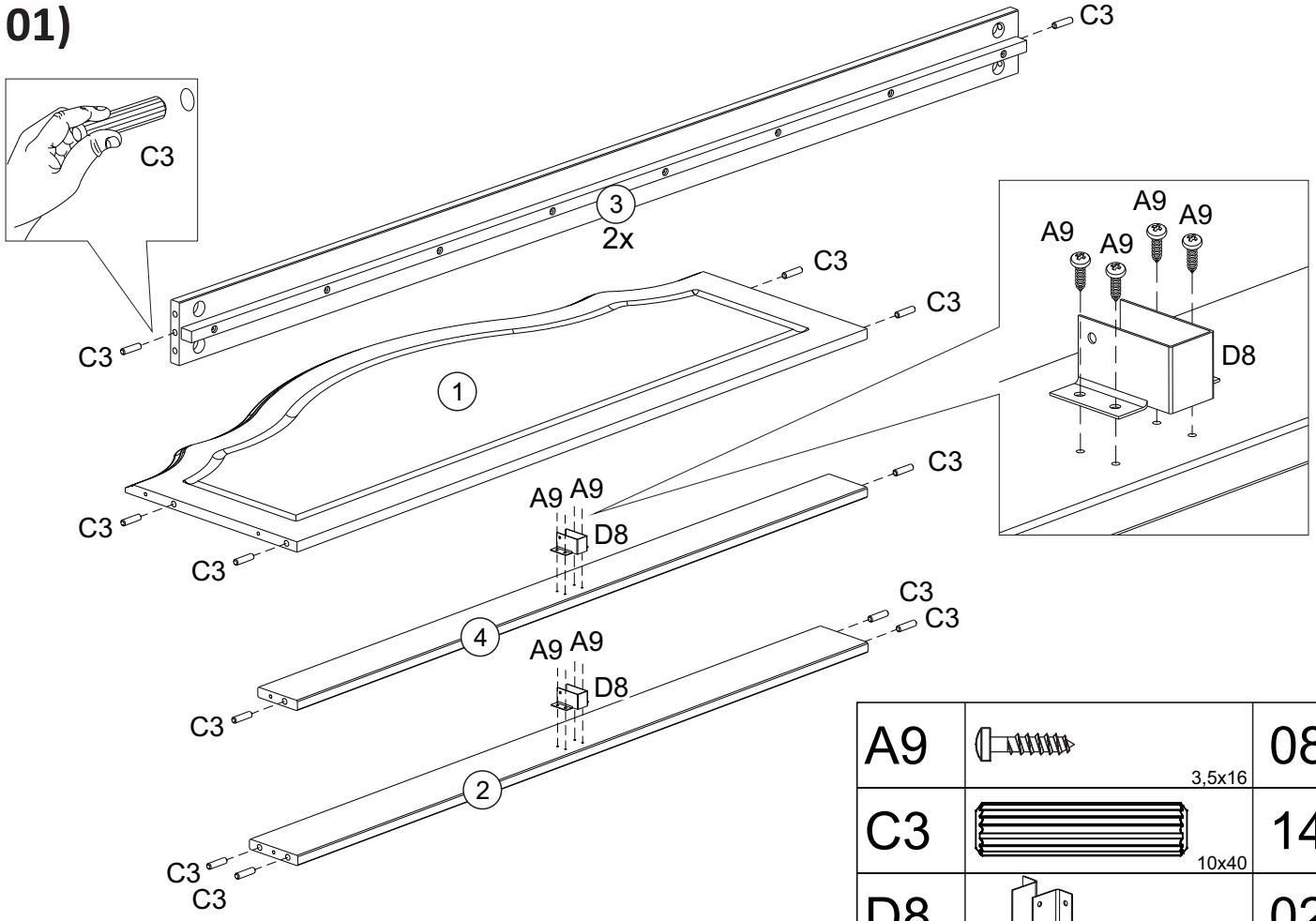

A9	3,5x16	08
C3	10x40	14
D8	20x50	02

02)

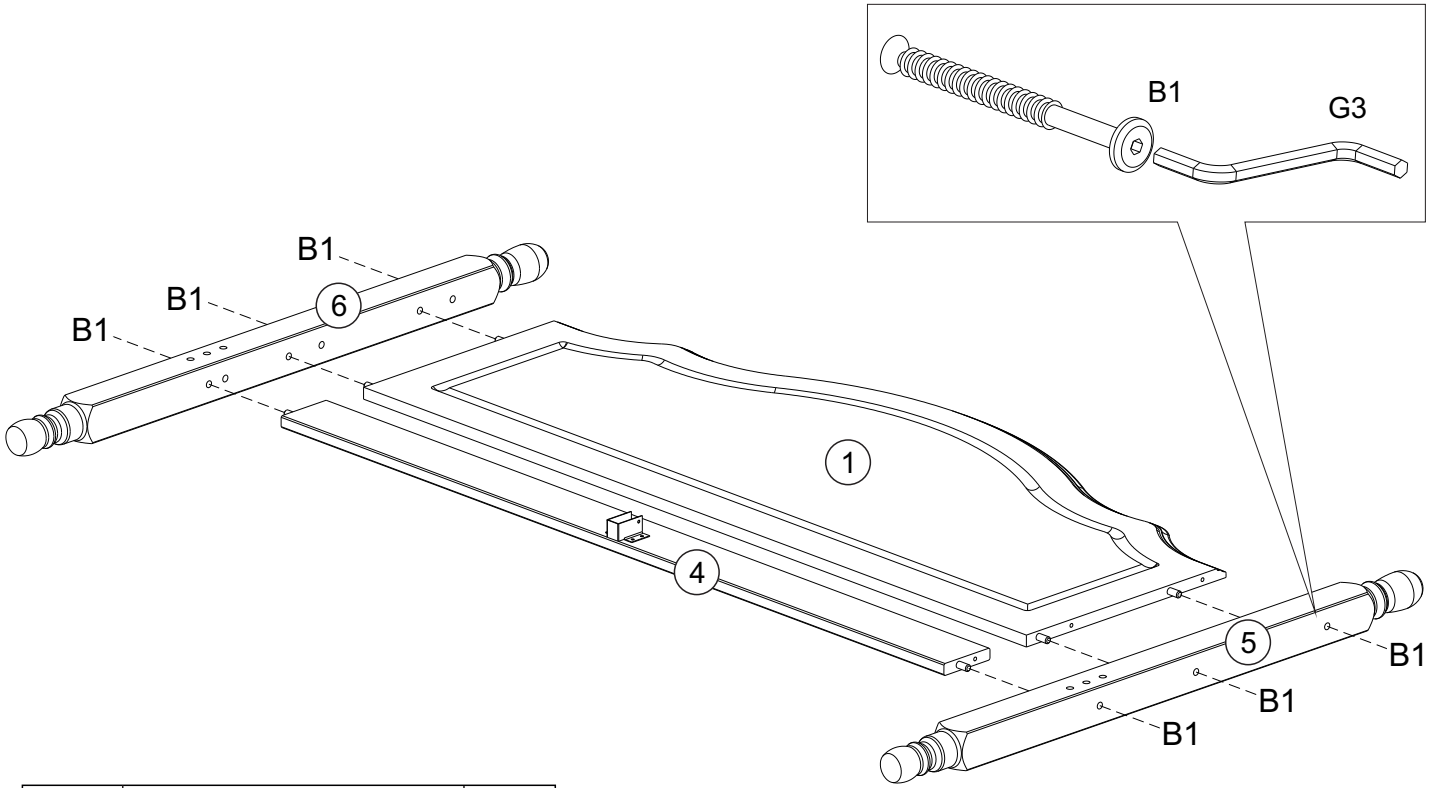

B1	7,0x100	06
G3		01

03)

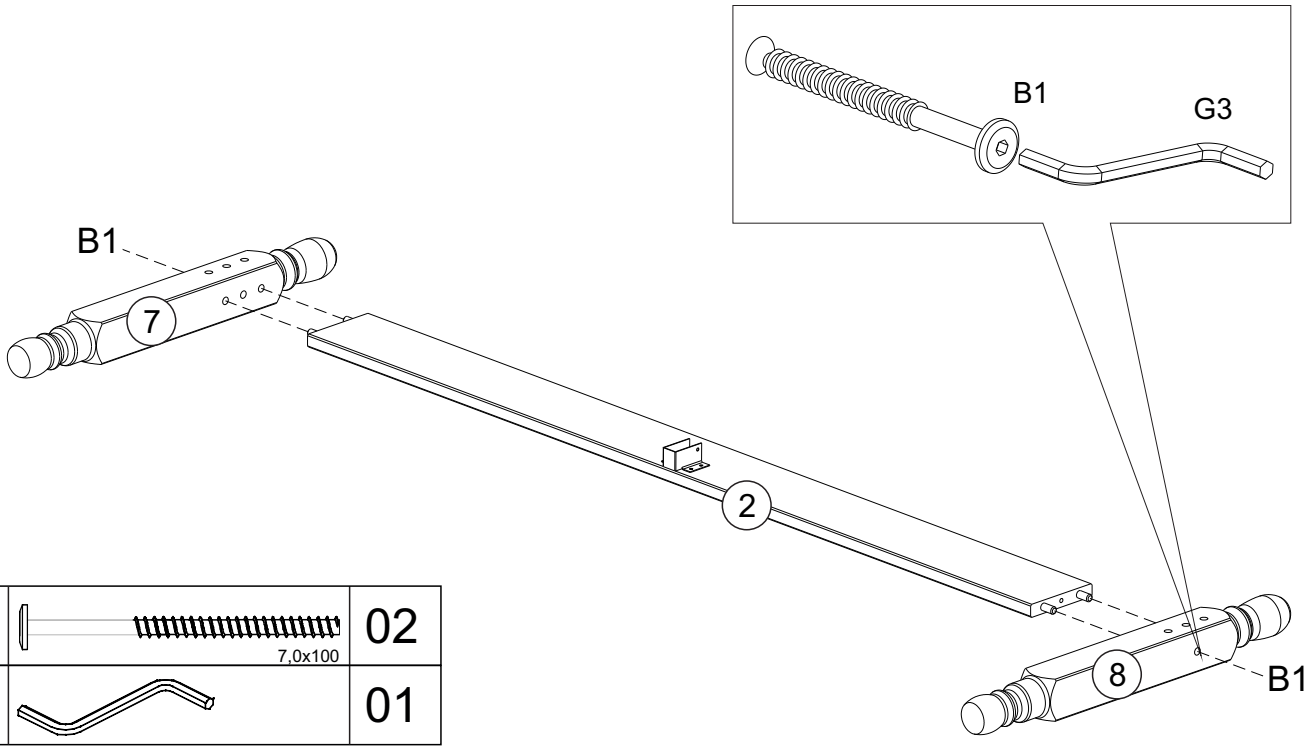

B1	7,0x100	02
G3		01

04)

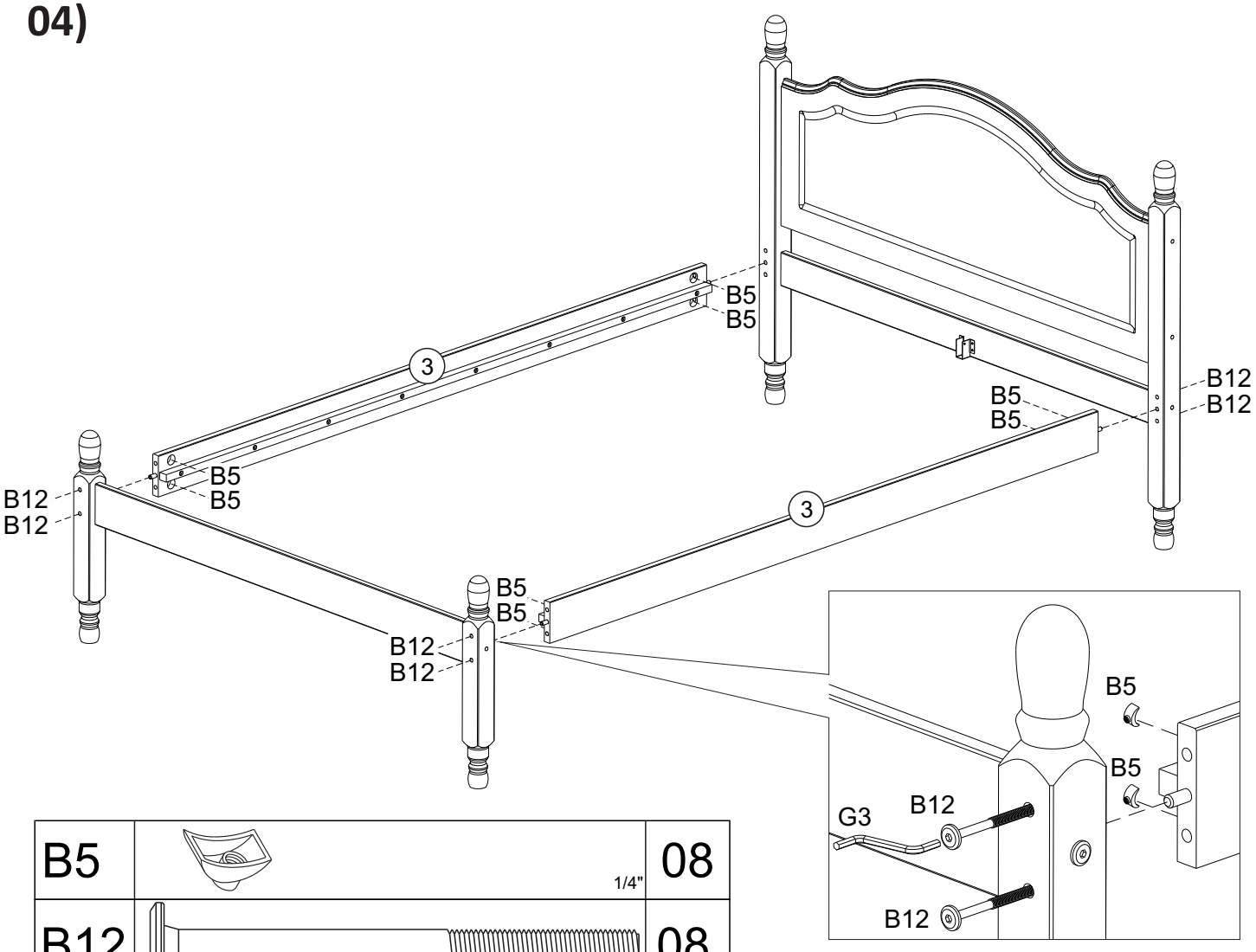

B5	1/4"	08
B12	1/4"x100	08
G3		01

05)

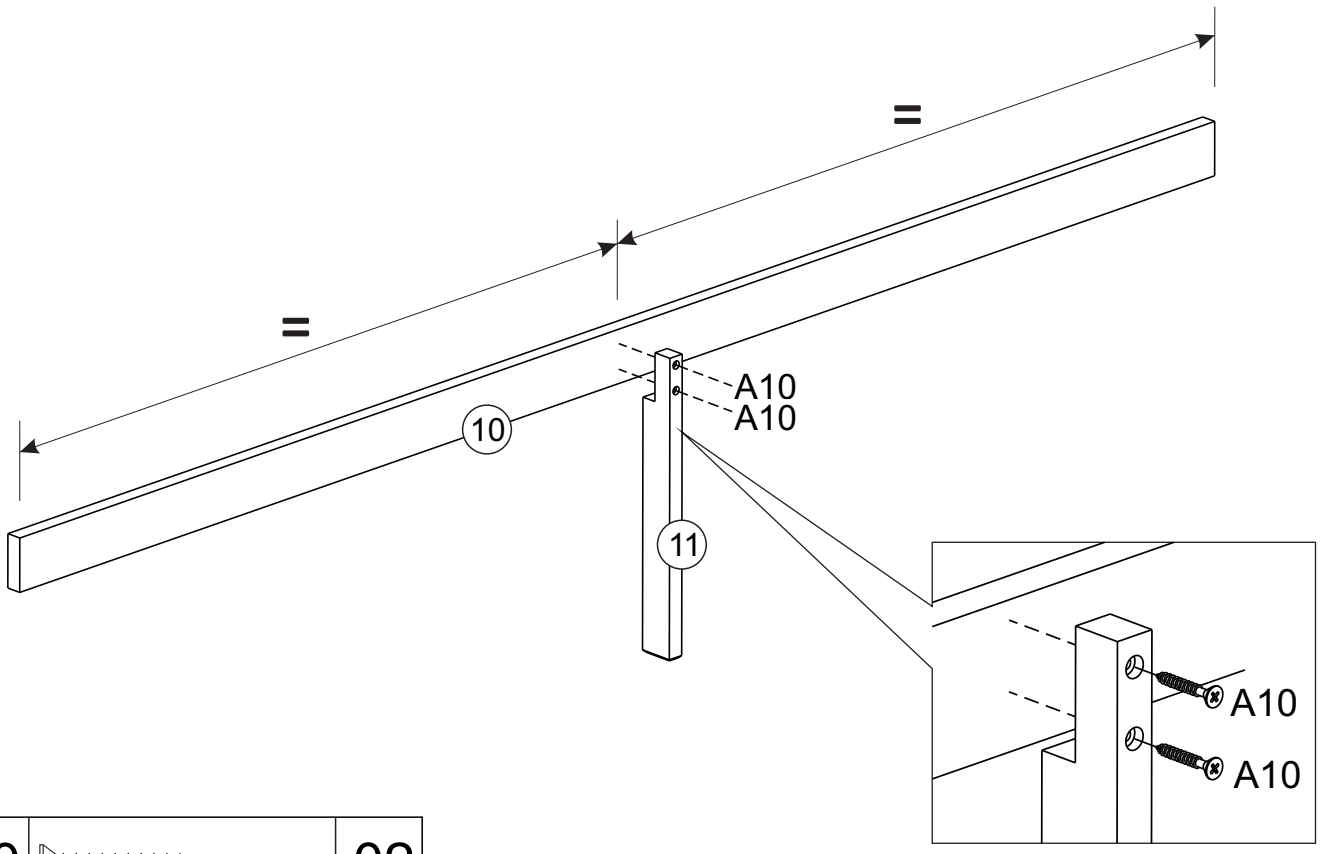

A10	3,5x30	02

06)

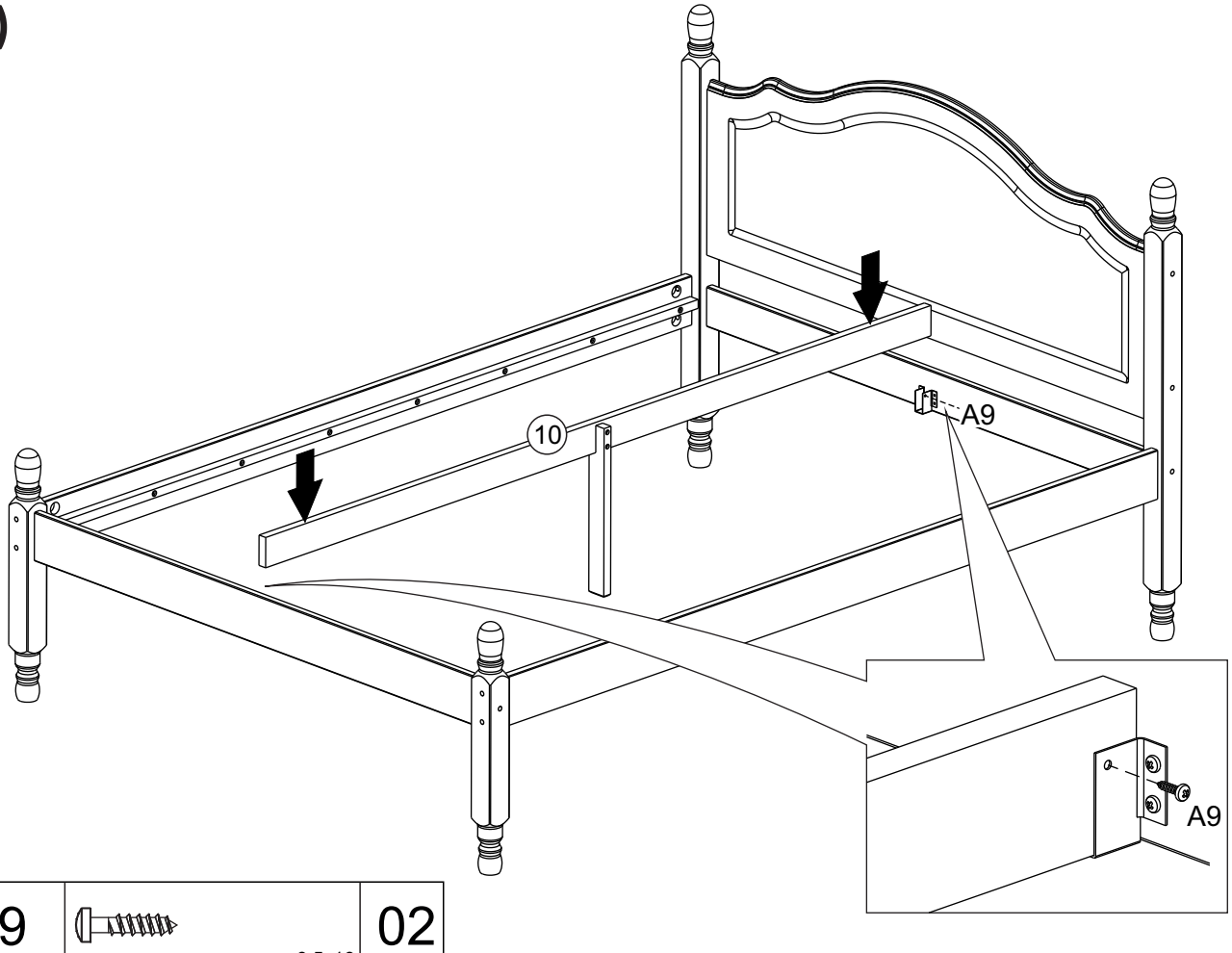

A9	3,5x16	02

07)

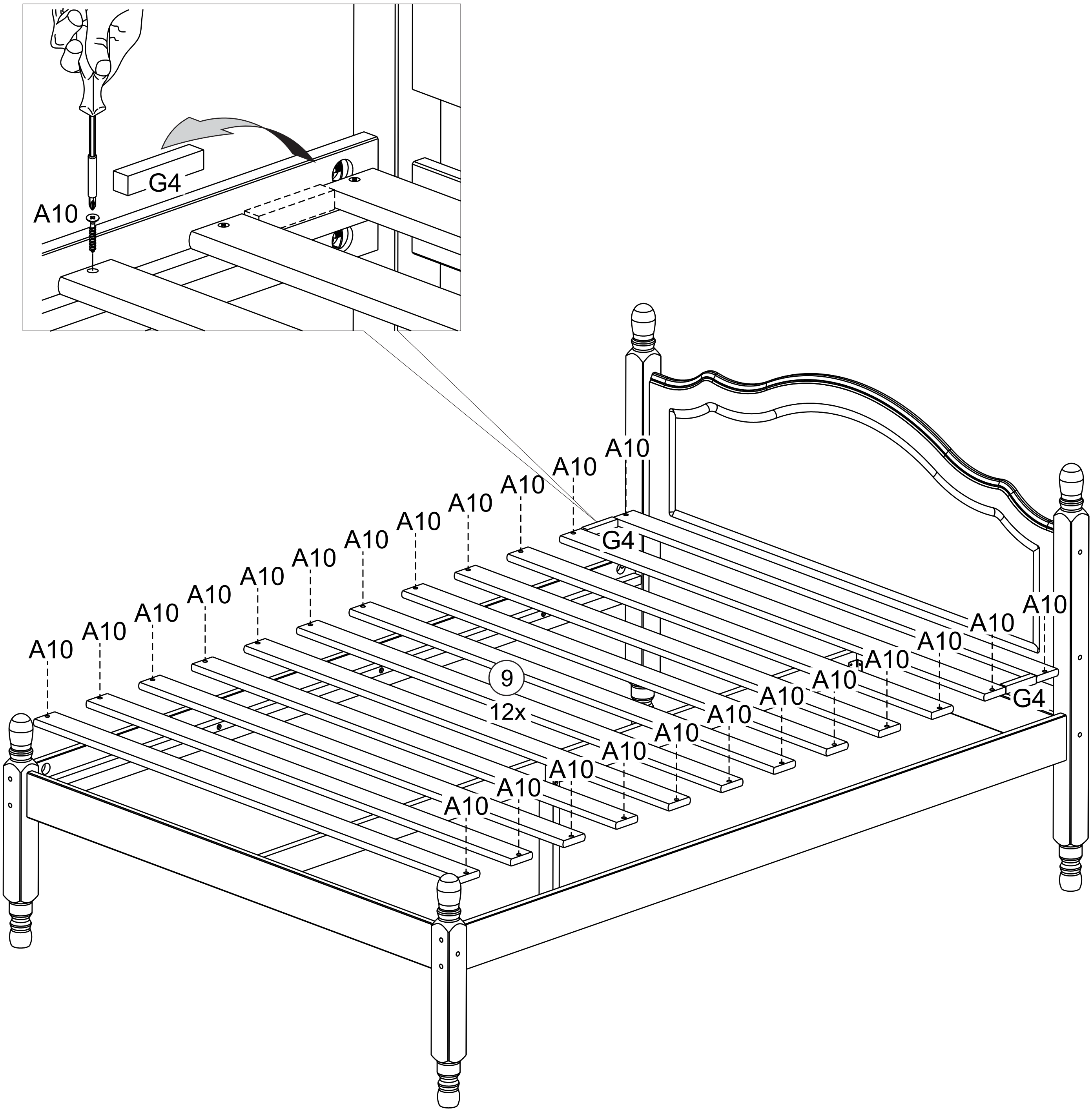

A10	3,5x30	24
G4	spacer block 96mm	02