ASSEMBLY INSTRUCTIONS

MONTECITO COLLECTION

U7624-30 - MONTECITO SOFA

Thank you for being our valued customer. Be sure to check all packing materials carefully for small parts which may have come loose inside the carton during shipment. Identify and count all items and compare them with the parts list below.

CAUTION: Read the instructions carefully before assembly.

1. We recommend that you assemble this product with the assistance of another person to eliminate damage to the product during assembly.
2. When you want to reposition the product, please always "LIFT & MOVE."

PARTS LIST

NO.	DESCRIPTION	SKETCH	Q'TY (PCS)
①	SEAT FRAME	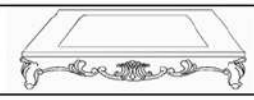	1
②	LEFT ARM		1
③	RIGHT ARM		1
④	BACKREST	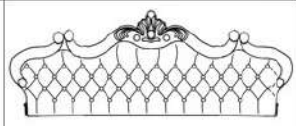	1
⑤	SEAT CUSHION	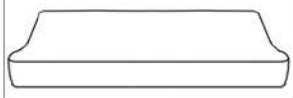	1
⑥	LEG		4
⑦	MIDDLE LEG		1

HARDWARE LIST

NO.	DESCRIPTION	SKETCH	Q'TY (PCS)
Ⓐ	ALLEN KEY 13/64"x1 3/16"x3 5/32"		1 PCS
Ⓑ	BOLT Ø5/16x2 31/64"		15 PCS
Ⓒ	FLAT WASHER Ø5/16"x55/64"		15 PCS
Ⓓ	WASHER Ø5/16"x 15/32"		15 PCS

ASSEMBLY INSTRUCTIONS

MONTECITO COLLECTION

U7624-30 - MONTECITO SOFA

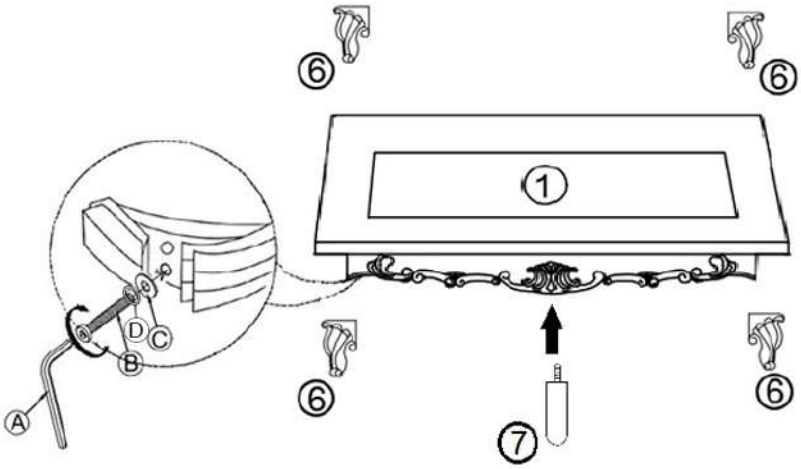

STEP 1:

Align and attach legs (6) to the seat frame (1) using bolt (B) with washer (D) and flat washer (C) and securing with Allen Key (A)
Screw the middle leg (7) to the seat frame (1)

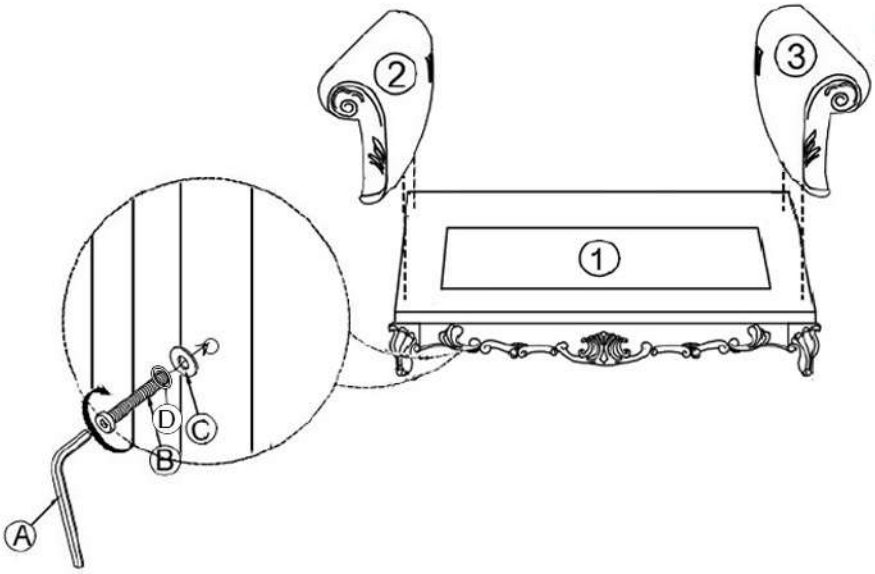

STEP 2:

Align and attach Left arm (2) and Right arm (3) to the seat frame (1) using bolt (B) with washer (D) and flat washer (C) and securing with Allen Key (A)

ASSEMBLY INSTRUCTIONS

MONTECITO COLLECTION

U7624-30 - MONTECITO SOFA

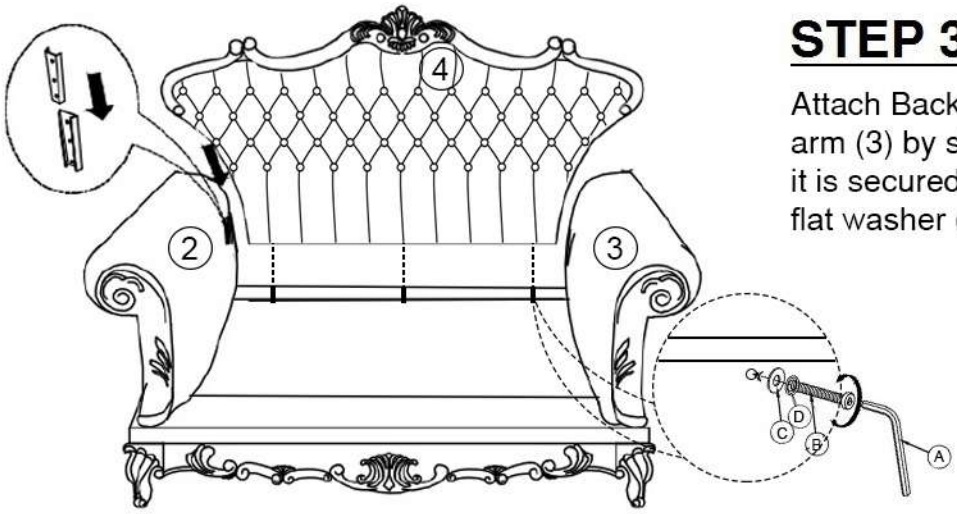

STEP 3:

Attach Backrest (4) to the Left arm (2) and Right arm (3) by sliding in the backets all the way until it is secured and using bolt (B) with washer (D) and flat washer (C) and securing with Allen Key (A)

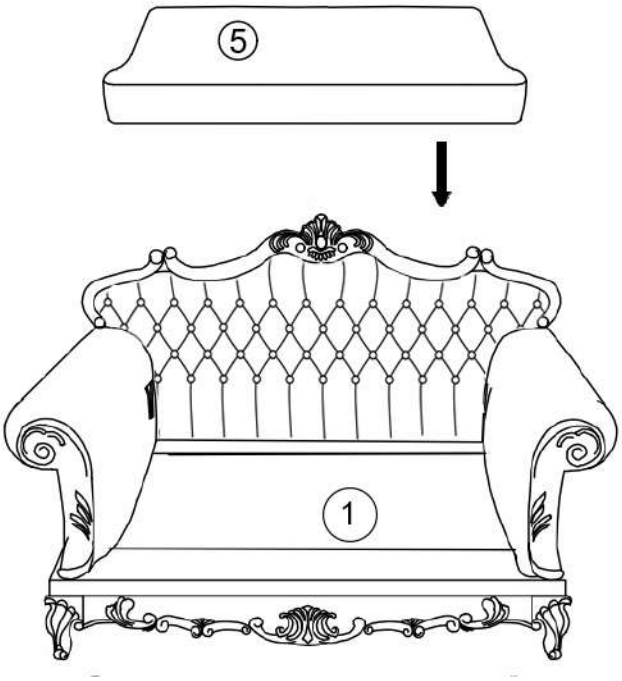

STEP 4:

Place the Seat cushion (5) on to the Seat frame (1)

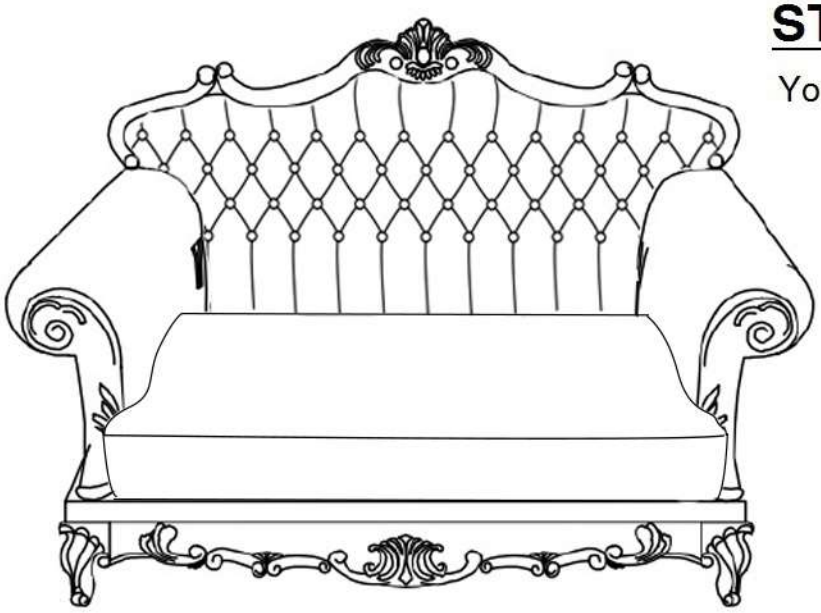

STEP 5:

Your product is ready for you to enjoy .