MOE'S

home collection

ASSEMBLY INSTRUCTIONS.

STUDIO SWIVEL OFFICE CHAIR LOW BACK GREY VEGAN LEATHER

ZM-1002-29

THANK YOU FOR YOUR PURCHASE!

PARTS AND HARDWARE.

1 CHAIR BODY X1	2 MULTIFUNCTIONAL MECHANISM X1	
3 ARM X2	4 GAS LIFT X1	
5 BASE X1	6 CASTER X5	
7 BOLT M8x50 x4	8 BOLT M8x20 x4	9 FLAT WASHER x4
10 STEEL SPACER x4	11 ALLEN KEY M8 x1	12 ALLEN KEY M6 x1

NOTES.

Thank you for purchasing this quality product!Be sure to check all packing material carefully for small part that may have come loose inside the carton during shipping.

CAUTION: Test any cleaners on an inconspicuous area of the product to ensure compatibility. Assemble the product on a padded surface to reduce the risk of scratching to the product or your work surface.

STEP 1.

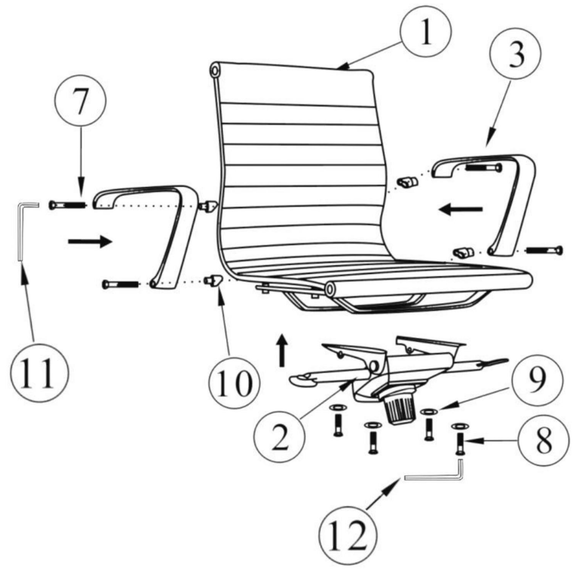

STEP 2.

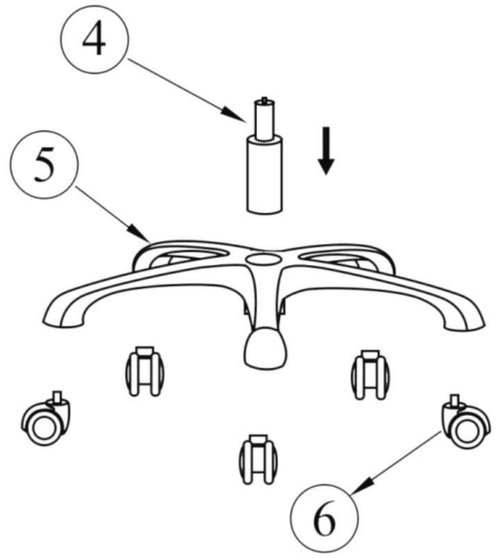

STEP 3.

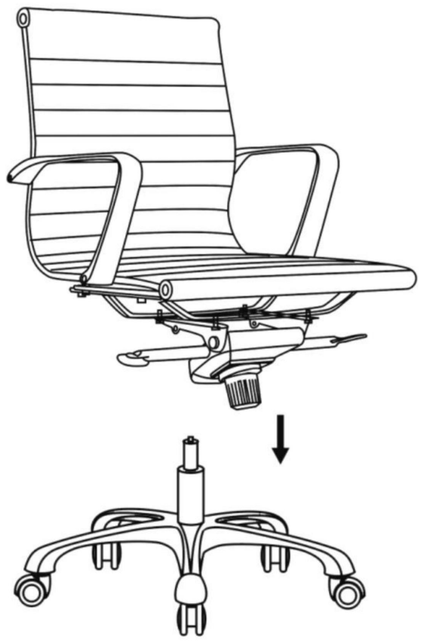

STEP 4.