MOE'S

home collection

ASSEMBLY INSTRUCTIONS.

STUDIO SWIVEL OFFICE CHAIR LOW BACK BLACK VEGAN LEATHER

ZM-1002-02

THANK YOU FOR YOUR PURCHASE!

PARTS AND HARDWARE.

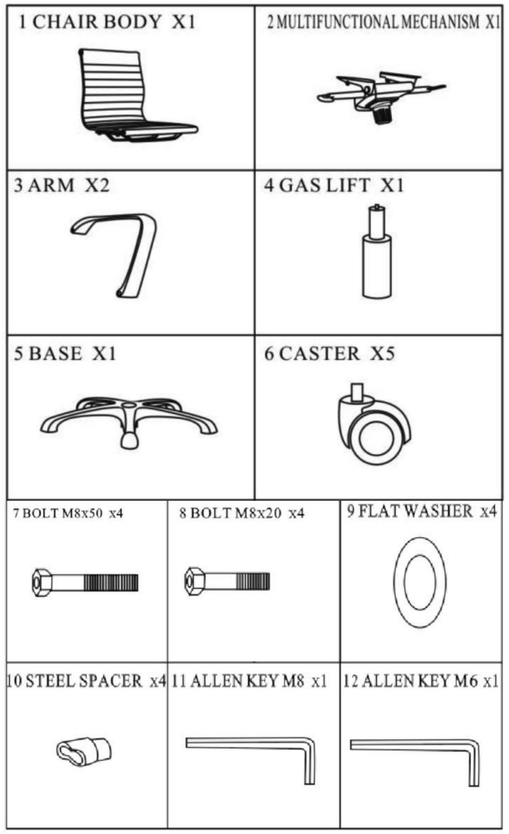

NOTES.

Thank you for purchasing this quality product!Be sure to check all packing material carefully for small part that may have come loose inside the carton during shipping.

CAUTION: Test any cleaners on an inconspicuous area of the product to ensure compatibility. Assemble the product on a padded surface to reduce the risk of scratching to the product or your work surface.

STEP 1.

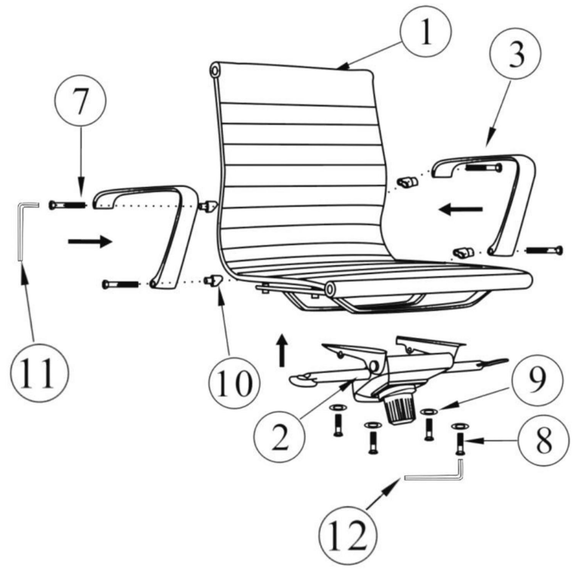

STEP 2.

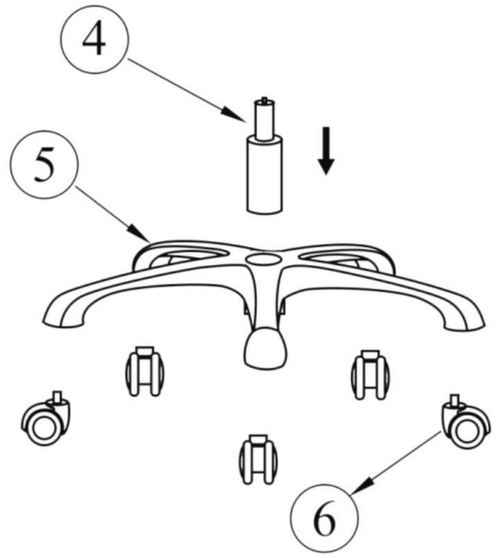

STEP 3.

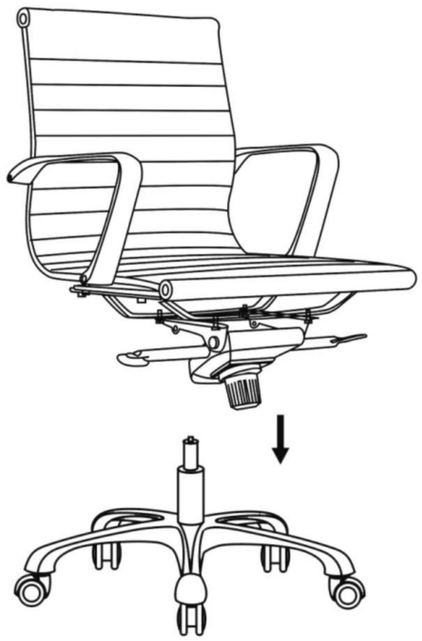

STEP 4.