ASSEMBLY INSTRUCTIONS

LEGACY CLASSIC
FURNITURE

9740-140 SLING BACK SIDE CHAIR

Thank you for purchasing this quality product. Before beginning, please check the packing material carefully for small parts which may have come loose inside the carton during shipping. Please do not discard any packing material until all parts have been located. If any parts are missing, please contact your dealer for prompt replacement.

Caution: (1) These parts are cumbersome and heavy. This product can best be assembled with the assistance of one or more persons in order to prevent personal injury and to ensure parts are not damaged during the assembly process. If dirty, clean finished parts with mild dishwashing liquid and water solution applied on damp cloth. Cloth should not be excessively wet. Polish finish with soft cloth and an industry recognized furniture polish.

(2) To prevent damage to your floor or carpet, please check the bottom of each piece of furniture for stain residue and rough surfaces and also check for staples or nails left after removing the packaging material. The manufacturer will not be held responsible if preventative steps are not taken prior to installation.

(3) During normal use every day, screws, bolts, nuts and wooden plugs may loosen up. They should be periodically inspected and re-tightened to prevent damage to the furniture and (or) personal property or cause injury. Always check to be sure all hardware on this list and the below mentioned components are attached to the furniture properly and kept tightened.

Parts & Hardware List:

PARTS LIST		QTY	NO.	HARDWARE LIST			QTY
A	LEFT SIDE FRAME	1 PC	# 1		3" L	BOLT + LOCK WASHER + FLAT WASHER ----- 5/16" Dia	8 SETS
B	RIGHT SIDE FRAME	1 PC	# 2		1-1/2" L	ALLEN BOLT + LOCK WASHER + FLAT WASHER ----- 1/4" Dia	4 SETS
C	UPHOLSTERY SEAT CUSHION WITH WOOD FRAME	1 PC	# 3		13 mm (Dia)	WOOD PLUG	4 PCS
D	TOP RAIL	1 PC	# 4		4*70mmL	ALLEN WRENCH	1 PC
			# 5		12*85mmL	WRENCH	1 PC
			# 6		40*10mmL	DOWEL	4PCS

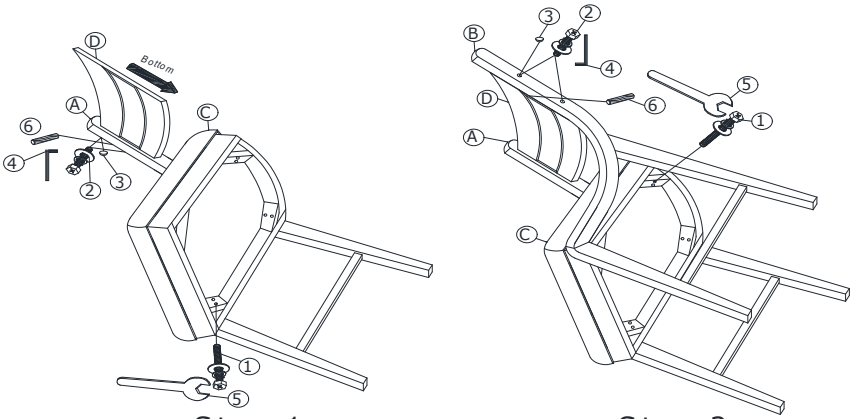

Step 1 Step 2

Assembly Procedures:

Tools required: Wrench #4 & 5 (see hardware list).

**Note: First read the chair leveling instructions. This is an additional assembly sheet found inside the carton. Place all chair parts on a clean, cushioned area to prevent scratching the furniture. Make sure the feet are free of stain, staples, screws and nails.

Assembly Steps:

Step 1: Assemble the seat frame (C) and top rail (D) to the left side frame (A). Follow arrow symbol for ensure right position of top rail (D).

Step 2: Assemble the right side frame (B) to the seat frame (C) and the top rail (D).

**Note: Do not tighten all the bolts until the chair has been put on a flat surface to adjust & level all the legs so that they do not wobble. Once adjusted then tighten all the bolts. Do not over tighten.