ASSEMBLY INSTRUCTIONS:
0200-1200/0200 DRESSER/MIRROR

LEGACY CLASSIC
FURNITURE

Thank you for purchasing this quality product. Before beginning, please check the packing material carefully for small parts which may have come loose inside the carton during shipping. Please do not discard any packing material until all parts have been located. If any parts are missing, please contact your dealer for prompt replacement.

Caution: (1) These parts are cumbersome and heavy. This product can best be assembled with the assistance of one or more persons in order to prevent personal injury and to insure parts are not damaged during the assembly process. If dirty, clean finished parts with mild dishwashing liquid and water solution applied on damp cloth. Cloth should not be excessively wet. Polish finish with soft cloth and an industry recognized furniture polish.

(2) To prevent damage to your floor or carpet, please check the bottom of each piece of furniture for stain residue and rough surfaces and also check for staples or nails left after removing the packaging material. The manufacturer will not be held responsible if preventative steps are not taken prior to installation.

(3) During normal use everyday, screws, bolts, nuts and wooden plugs may loosen up. They should be periodically inspected and re-tightened to prevent damage to the furniture and (or) personal property or cause injury. Always check to be sure all hardware on this list and the below mentioned components are attached to the furniture properly and kept tightened.

Parts & Hardware List:

	PART LIST		Q'TY
A	DRESSER		1 PC
B	BUN FOOT		4 PCS
C	SUPPORT LEG		1 PC
D	WOOD SUPPORT		2 PCS
E	MIRROR		1 PC

	HARDWARE LIST		Q'TY
1	BOLT	Ø1/4"*1-1/2"	8 PCS
2	LOCK WASHER	1/4"	8 PCS
3	FLAT WASHER	1/4"	8 PCS
4	ALLEN KEY	Ø1/4	1 PC
5	TIPPING-RESTRAINT		2 SET
6	LONG FELT FABRIC	45"*2-1/4"	1 PC

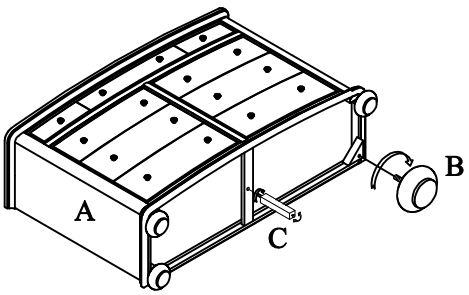

Step 2

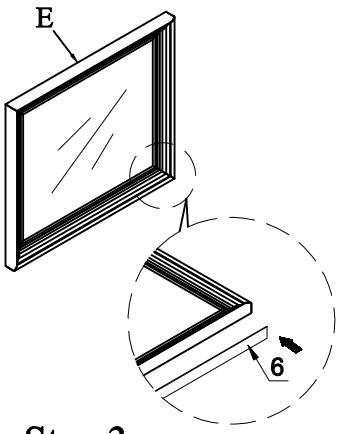

Step 3

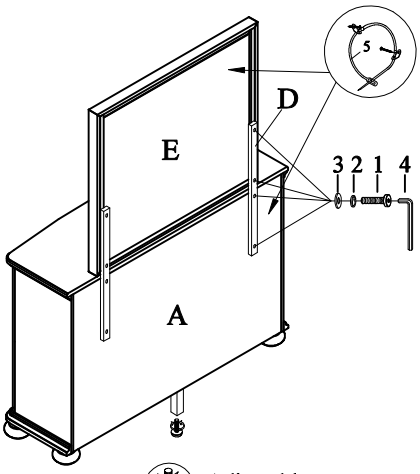

Adjustable Leveler

Step 4/5

Assembly Procedures:

Step 1: Lay out all parts and hardware on a clean protective surface to protect the furniture and floor during assembly. Make sure the quantity of each is correct and the feet are free of stains, staples, screws and nails.

Step 2: Place the dresser (A) back down on a clean soft flat surface such as a blanket and ensure the surface is clean of any objects that could scratch or damage the dresser.
Assemble four bun feet (B) and the support leg (C) to the dresser (A) as shown.

Step 3: Attach felt fabric to the underside of mirror shown.(bottom touching the top of dresser).

Step 4: Place the mirror (B) on the top of dresser (A). Attach the mirror (B) to dresser (A) using hardware (1, 2, 3, 4) & wood supports (C) as shown.
Assembly is complete.

Step 5: Adjust the leveler on the 5th foot, as shown, by unscrewing the leveler leg until it is firmly touching the floor supporting the case.
Assembly is complete.