Furniture of America®

Assembly Instructions

CM5814TV

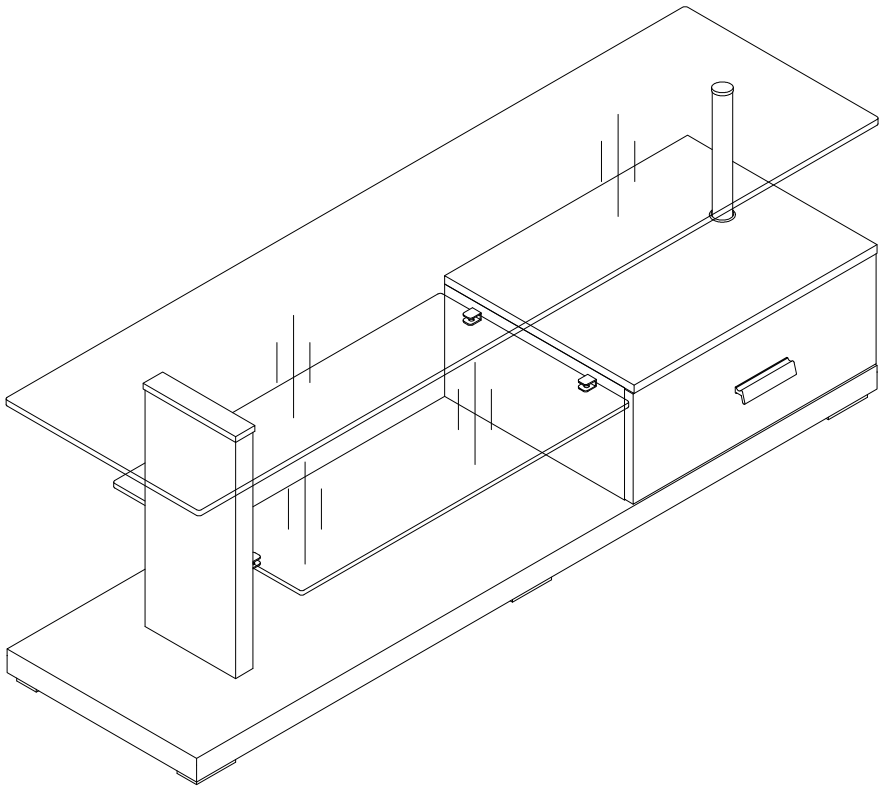

ASSEMBLY RATING

The Assembly Rating is a 5-point system that shows the degree of effort needed in assembling a specific product (with 1 being easy and 5 being difficult). For some products, two persons are recommended.

EASY ●●●○○ DIFFICULT

Tools Required For Assembly:

Allen Wrench 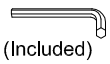 (Included)

Wrench (Included)

Phillips Screwdriver 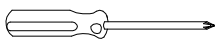 (Not Included)

2 PERSONS RECOMMENDED

Rev. 15-05-16

Furniture of America

ASSEMBLY & CARE ADVICE

FOR YOUR FURNITURE TO LAST,CORRECT ASSEMBLY AND PROPER MAINTENANCE ARE NECESSARY.
PLEASE FOLLOW THE INFORMATION PROVIDED BELOW TO FULLY ENJOY YOUR FURNITURE.

BASIC ASSEMBLY TECHNIQUES

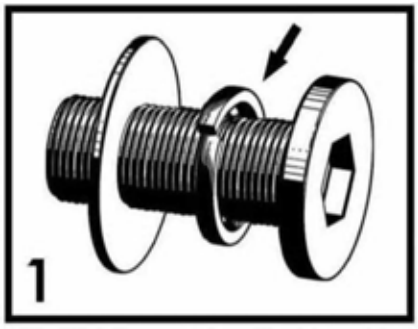

When lock or spring washer is used in an assembly, please make sure the lock or spring washer is placed between the larger flat washer and the head of the screw or bolt.

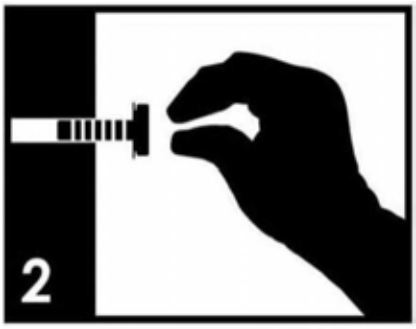

Position each part correctly and insert screws or bolts into their respective holes by hand tighten or using the proper hand tool. Only tighten when step is completed or when instructed to do so.

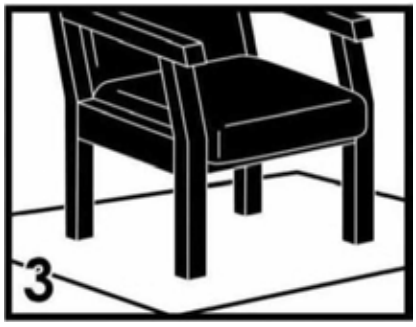

Use cardboard or carpet area when assembling furniture to prevent scratches . Make sure the furniture rests on a flat and level surface with each leg evenly touching the floor.

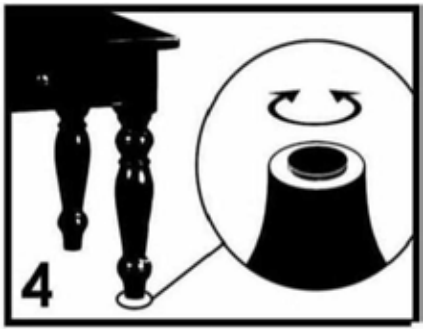

Some furniture comes with height adjusetment knobs underneath each leg. To lower or to raise each leg, you need to turn clockwise or counterclockwise, respectively.

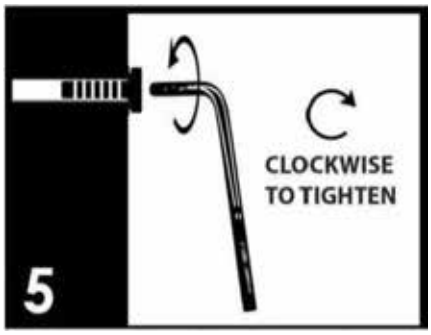

Make sure all parts are properly aligned, then use the appropriate hand tool to completely tighten the bolts or screws. Do not use power tools and do not overtighten.

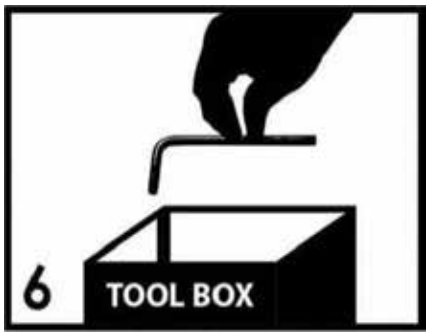

Save the instructions and store the Allen wrench or any supplied tool for later maintenance. After two weeks, check and tighten any loose hardware and repeat again every six months thereafter.

IT IS THE USER'S RESPONSIBILITY TO MAINTAIN THE FURNITURE.THE HARDWARE MAY LOOSEN OVER TIME AND MAY CAUSE THE FURNITURE TO BE WOBBLY AND UNABLE TO SUPPORT ITS INTENDED WEIGHT CAPACITY. THIS MAY LEAD TO COLLAPSE AND MAY CAUSE SERIOUS INJURY.

FAILURE TO FOLLOW THE GUIDELINES ABOVE MAY RESULT IN INJURY AND/OR PROPERTY DAMAGE.

FURNITURE OF AMERICA.ALL RIGHTS RESERVED.

Before you begin, please read Page 2 of "Assembly and Care Advice".

And remember, do not tighten until each step is completed or instructed.

Parts List

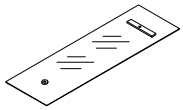

#1 x 1pc
Glass Top

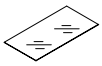

#2 x 1pc
Glass Shelf

#3 x 1pc
Pole

#4 x 1pc
Shelf Leg

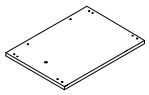

#5 x 1pc
Top Panel

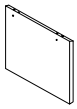

#6 x 1pc
Left Panel

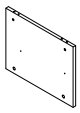

#7 x 1pc
Right Panel

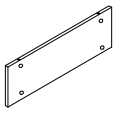

#8 x 1pc
Back Panel

#9 x 1pc
Drawer Left Panel

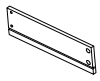

#10 x 1pc
Drawer Right Panel

#11 x 1pc
Drawer Back Panel

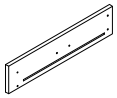

#12 x 1pc
Drawer Face Panel

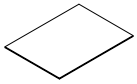

#13 x 1pc
Drawer Bottom Panel

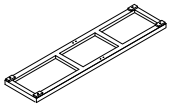

#14 x 1pc
Bottom Panel

#15 x 2pcs
Bottom Cap

Before you begin, please read Page 2 of "Assembly and Care Advice".

And remember, do not tighten until each step is completed or instructed.

Hardware List

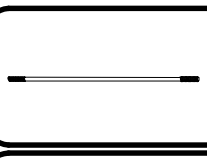

#A x 2pcs
Stud bolt 5/16"X17-3/4"

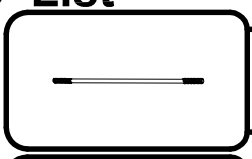

#B x 1pc
Stud bolt 5/16"X 9-1/2"

#C x 8pcs
Cam Lock Ø14.5

#D x 8pcs
Cam bolt 1/4" X 1-1/2"

#E x 12pcs
Cam Lock Ø12.5

#Fx 12pcs
Cam bolt 1/4" X 15/16"

#G x 10pcs
Wood Dowel Ø6X30mm

#H x 4pcs
Screw M5 X 12mm

#I x 3pcs
Hex Nut

#J x 3pcs
Flat Washer Ø18

#K x 4pcs
Glass Shelf Bracket

#L x 1pc
Drawer handle

#M x 2pcs
Screw M4 X 22mm

#N x 2pcs
Drawer Rails 36x350

#O x 8pcs
Screw M4 X 10mm

#P x 2pcs
Bolt 1/4"X 3/4"

#Q x 1pc
Cap

#R x 1pc
Socket Wrench M8

#S x 1pc
Allen Wrench M4

#A x 2pcs
#B x 1pc
#Q x 1pc

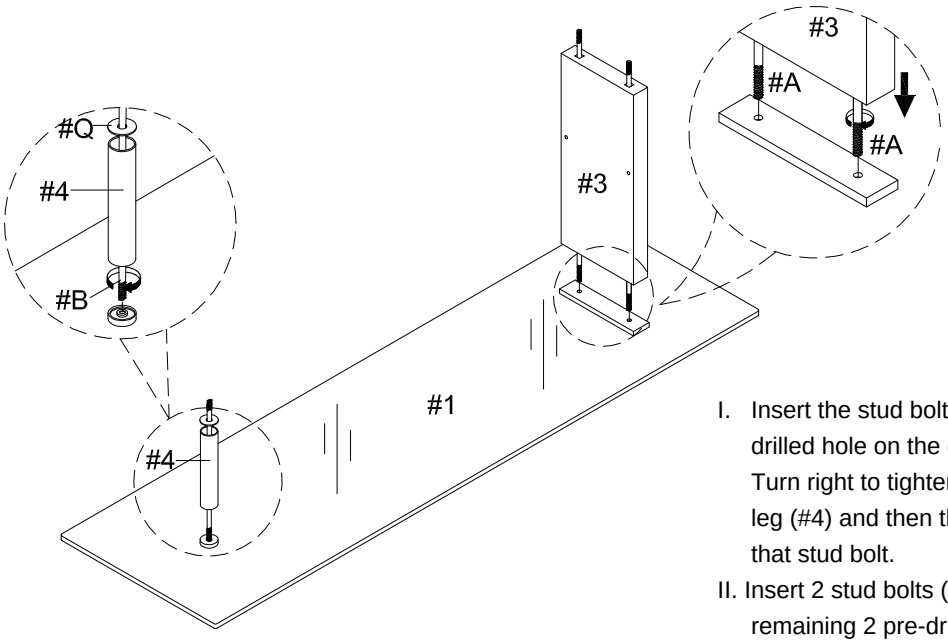

I. Insert the stud bolt (#B) into a pre-drilled hole on the glass top (#1). Turn right to tighten. Insert the shelf leg (#4) and then the cap (#Q) onto that stud bolt.

II. Insert 2 stud bolts (#A) into the remaining 2 pre-drilled holes on the glass top (#1). Turn right to tighten. Then insert the pole (#3) onto those bolts.

#C x 4pcs
#D x 4pcs
#E x 2pcs
#F x 2pcs
#G x 4pcs
#O x 4pcs
#N x 2pcs

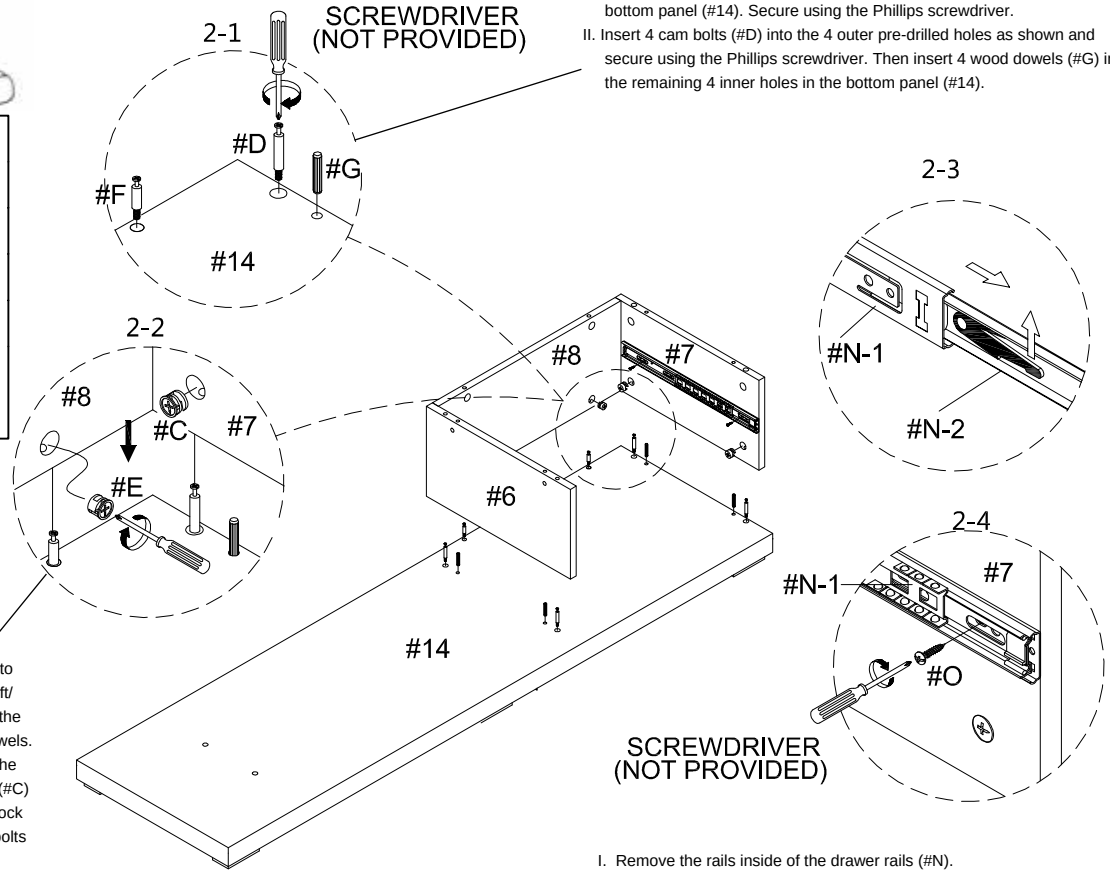

I. Insert 2 cam bolts (#F) into the pre-drilled holes along the back side of the bottom panel (#14). Secure using the Phillips screwdriver.

II. Insert 4 cam bolts (#D) into the 4 outer pre-drilled holes as shown and secure using the Phillips screwdriver. Then insert 4 wood dowels (#G) into the remaining 4 inner holes in the bottom panel (#14).

I. Insert the back panel (#8) onto the cam bolts (#F) and the left/ right side panels (#7/6) onto the cam bolts (#D) and wood dowels.

II. Insert 2 cam locks (#E) into the back panel and 4 cam locks (#C) into the side panels (#7/6). Lock the cam locks with the cam bolts using a Phillips screwdriver.

I. Remove the rails inside of the drawer rails (#N).

II. Align the drawer rails (#N) to the pre-drilled holes along the sides of the side panels (#7/6) and insert 2 screws (#O) into each rail. Secure using a Phillips screwdriver.

#C x 4pcs
#D x 4pcs
#E x 2pcs
#F x 2pcs
#G x 4pcs

I. Insert 2 cam bolts (#F) into the pre-drilled holes along the back side of the top panel (#5). Secure using the Phillips screwdriver.

II. Insert 4 cam bolts (#D) into the outer corner pre-drilled holes of the top panel (#5) as shown and secure using a Phillips screwdriver. Then insert 4 wood dowels (#G) into the remaining holes of the top panel.

III. Insert 2 cam locks (#E) into the back panel and 4 cam locks (#C) into the side panels (#7/6).

IV. Insert the top panel (#5) onto the back and side panels. Lock the cam locks with the cam bolts using a Phillips screwdriver.

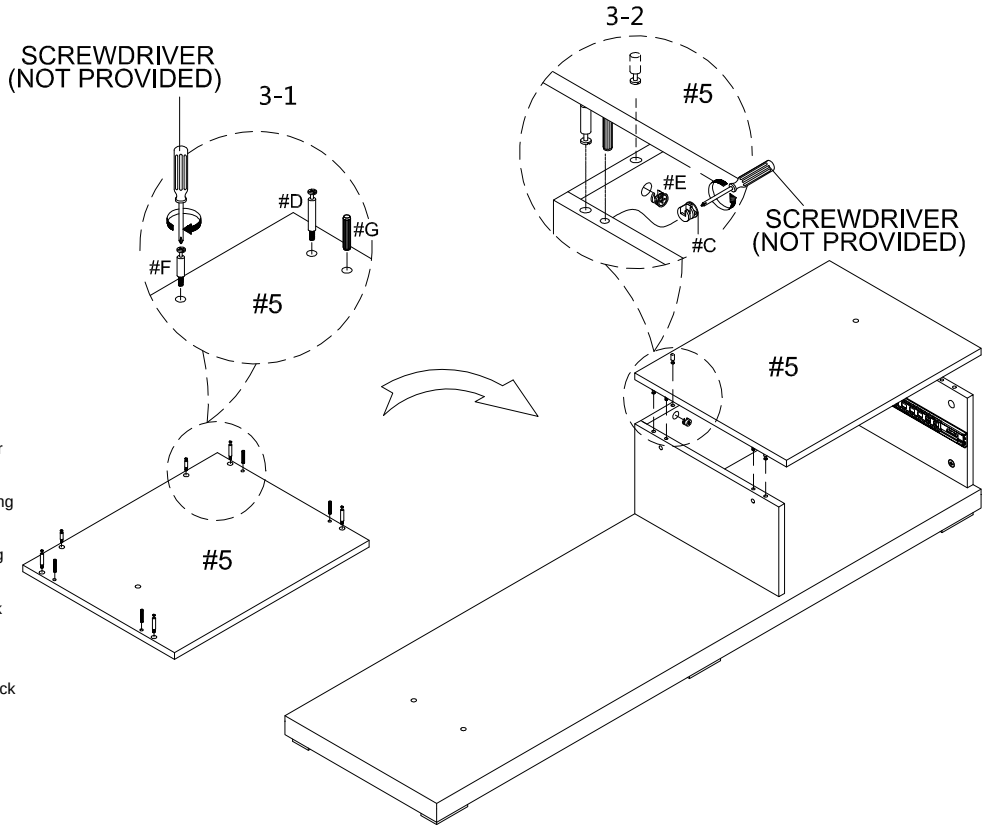

#G x 2pcs
#I x 3pcs
#J x 3pcs
#P x 2pcs

I. Apply the the assembled bottom panel upside down onto the shelf leg and pole.

II. Insert a flat washer (#J) and hex nut (#I) onto the threaded end of the stud bolts (#A), Secure using the socket wrench (#R).

III. Insert a flat washer (#j) then hex nut (#I) onto the threaded ends of the stud bolt (#B) located on the leg. Secure using the socket wrench (#R).

IV. Align 2 bottom caps (#15) to the pre-drilled holes along the sides of the bottom panel (#14) Insert bolts (#P) and secure using the Allen wrench (#S).

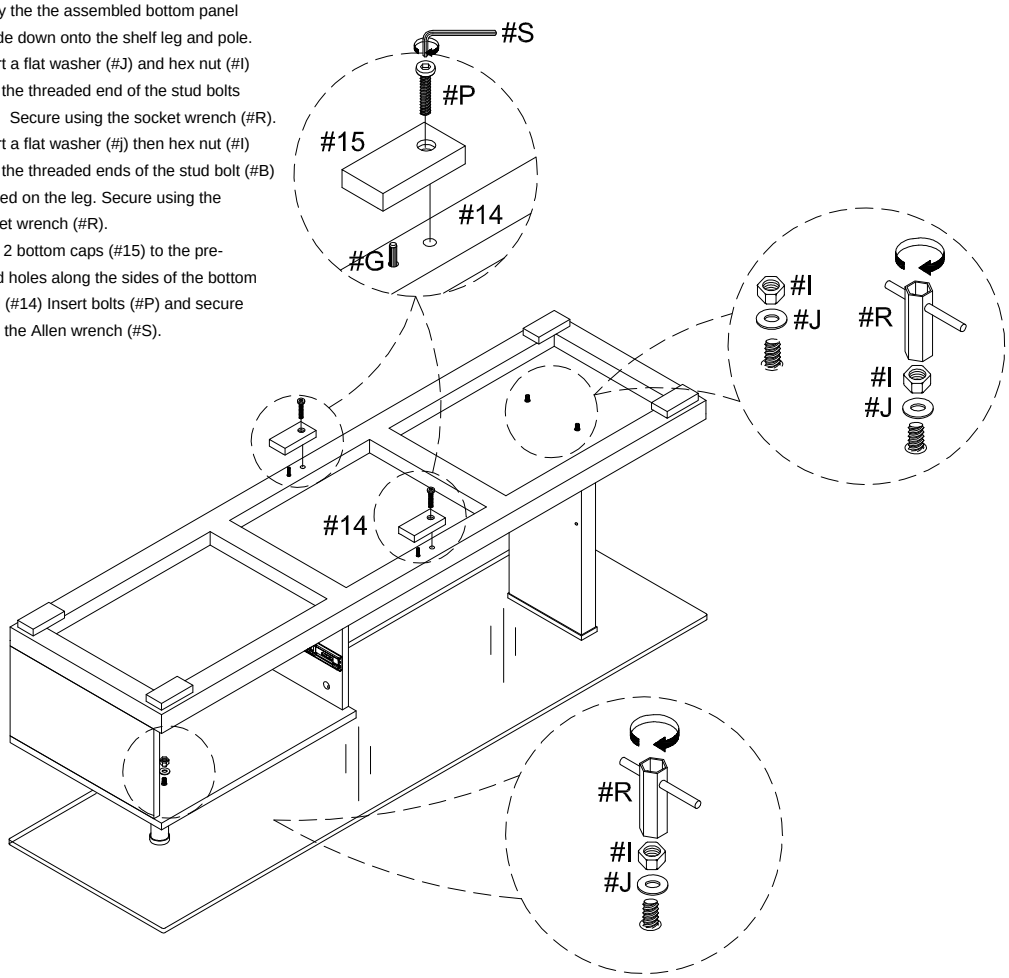

#5

#E x 8pcs
#F x 8pcs

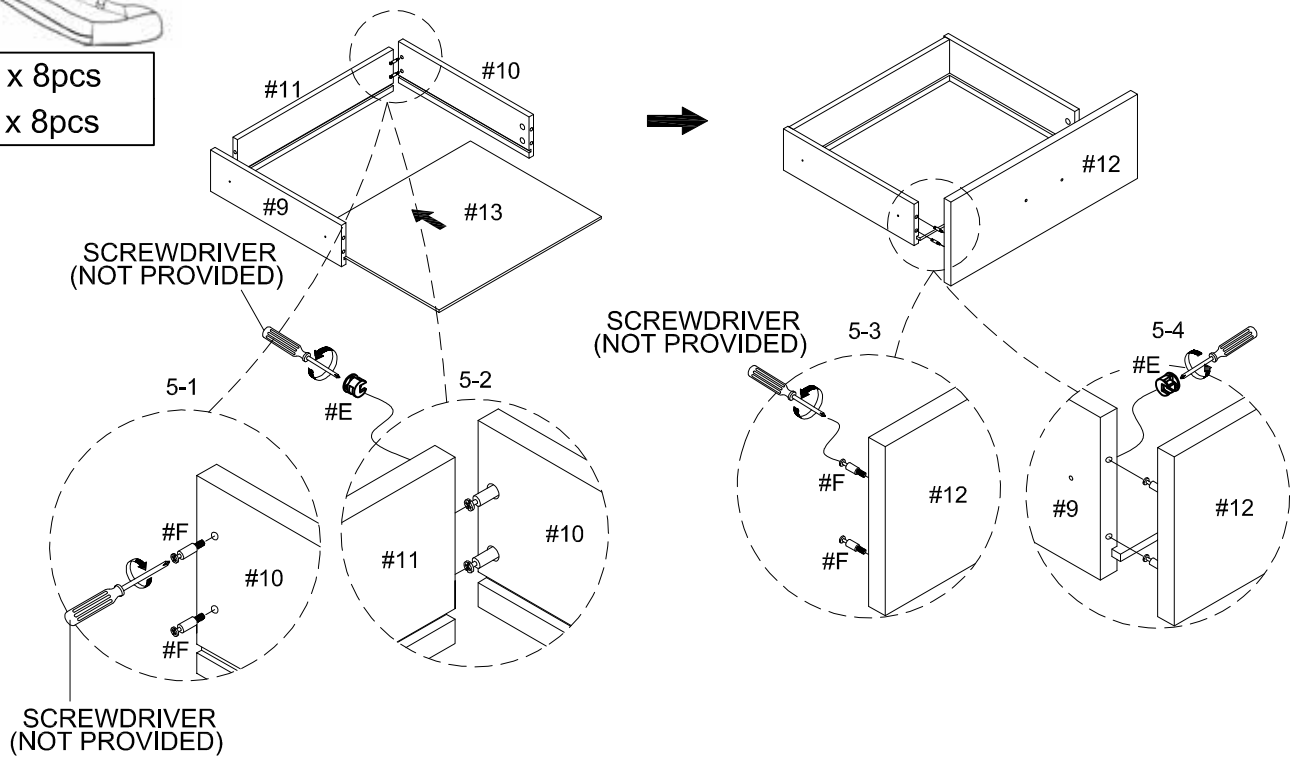

#6

#L x 1pc
#M x 2pcs
#O x 4pcs

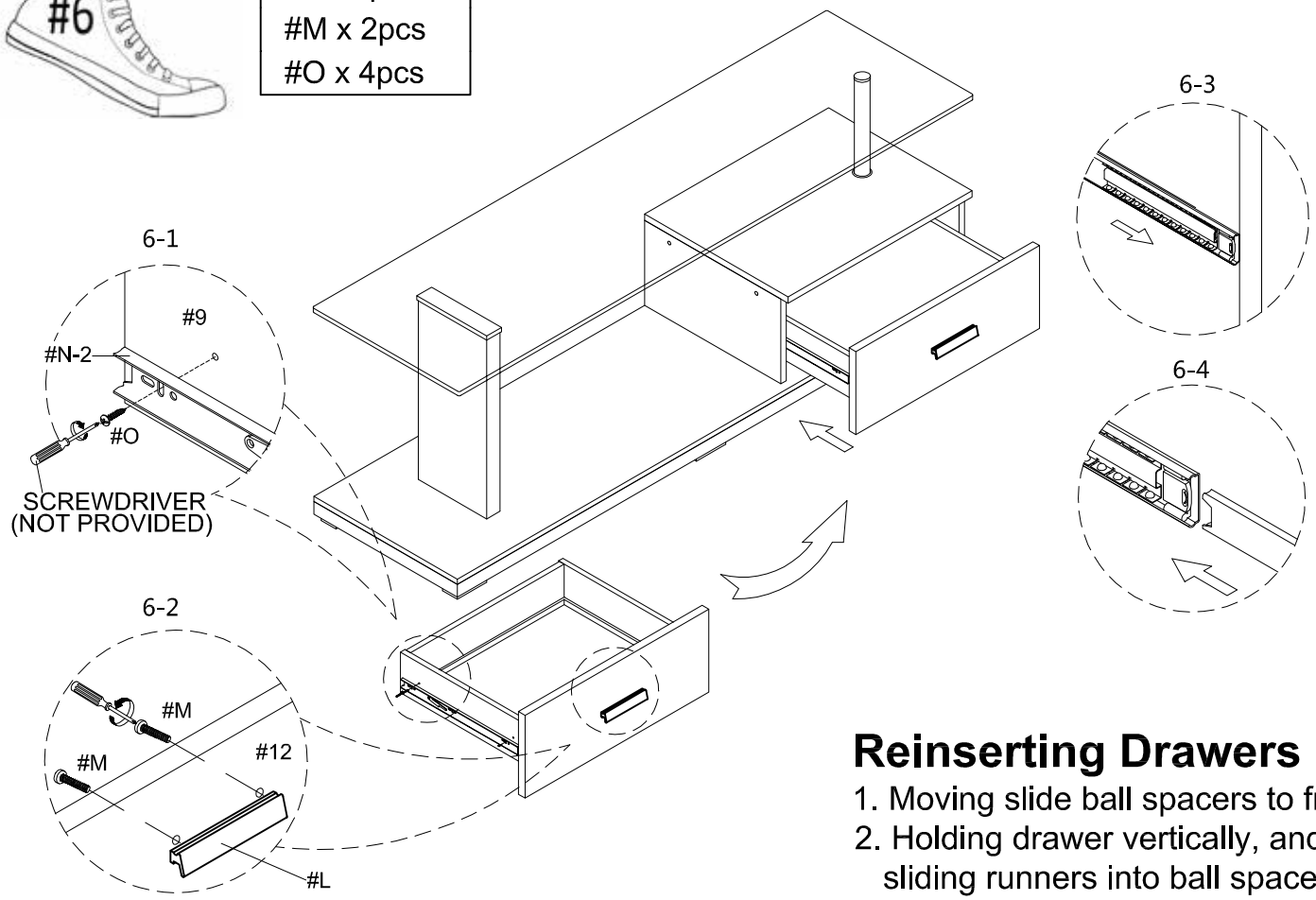

Reinserting Drawers

1. Moving slide ball spacers to front.
2. Holding drawer vertically, and sliding runners into ball spacers.

#H x 4pcs
#K x 4pcs

I. Align the glass shelf brackets (#K) to the pre-drilled holes along the sides of the pole and side panel. Insert a screw (#H) into each bracket and secure using a Phillips screwdriver.
II. Apply the glass shelf (#2) and secure using the Allen wrench (#S).

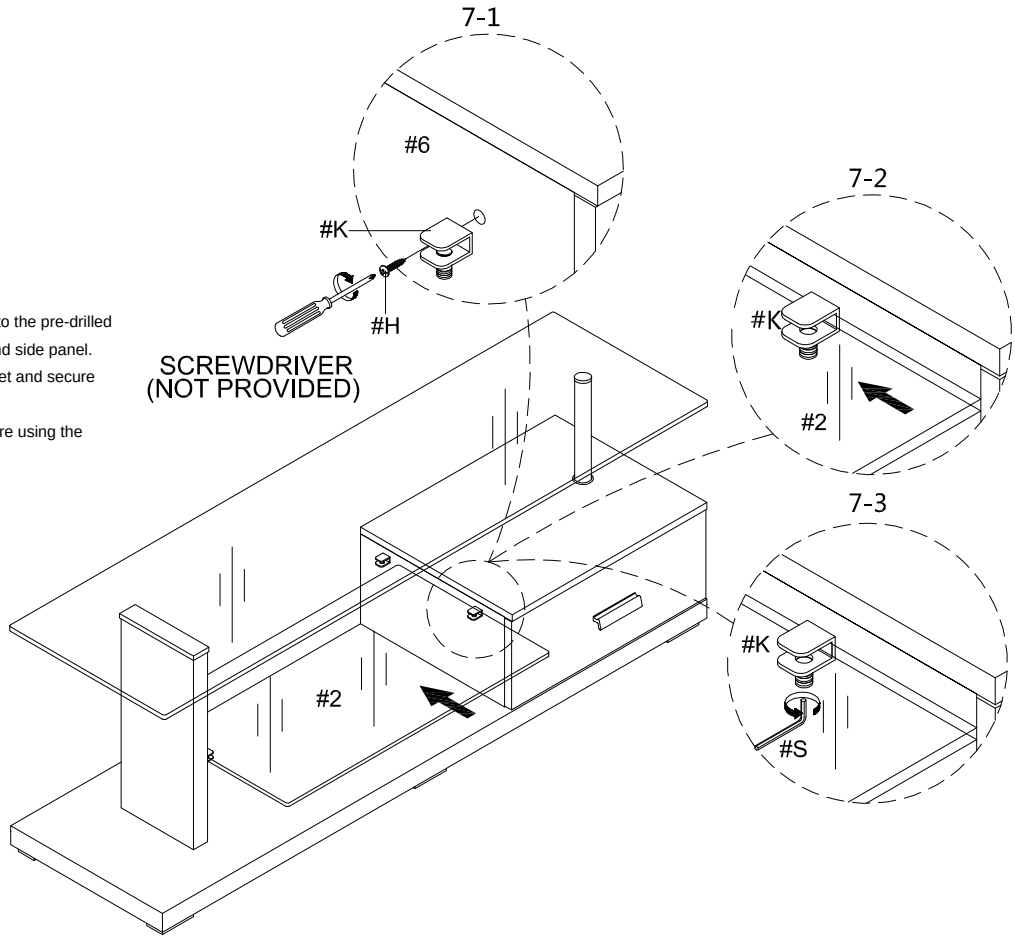

Make sure all bolts are firmly secured.

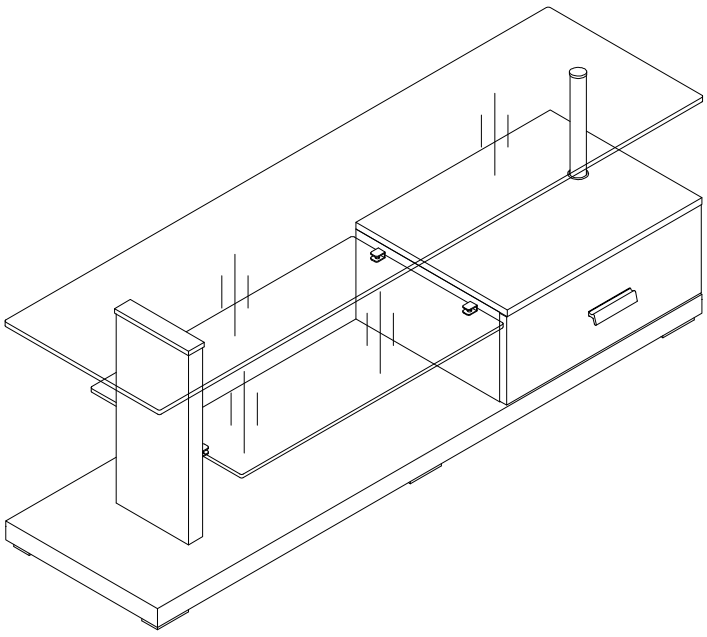

ASSEMBLY IS COMPLETED