DIAMOND SOFA®

NEST CONSOLE TABLE

A-1pc	B-2pcs	C-2pcs	D-16pcs	E-1pc	F-4pcs
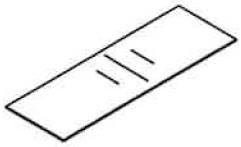			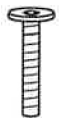		

1

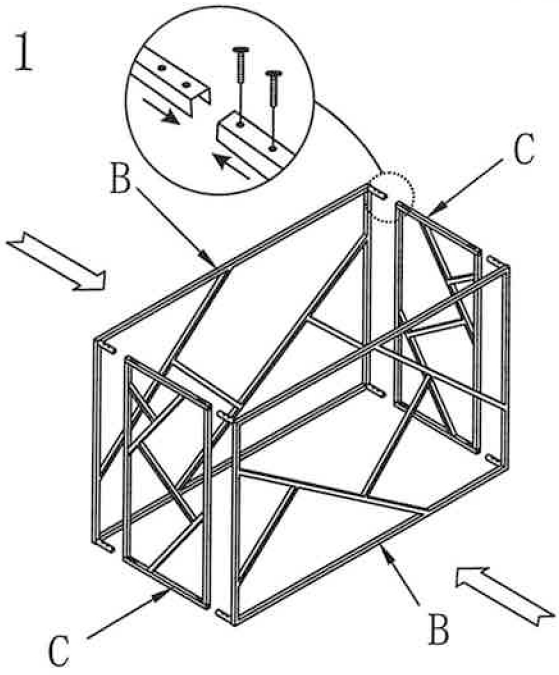

2

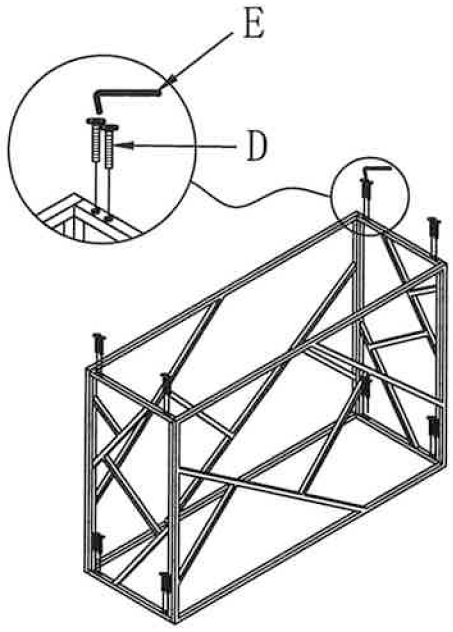

3

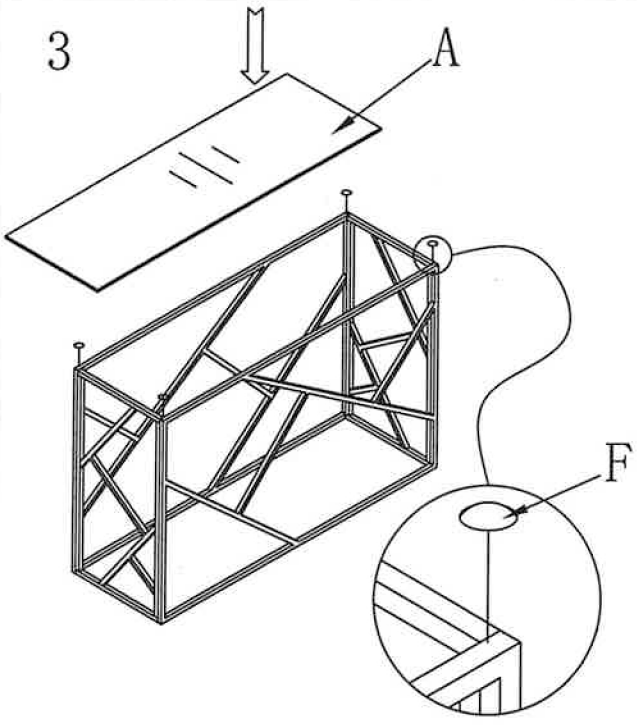
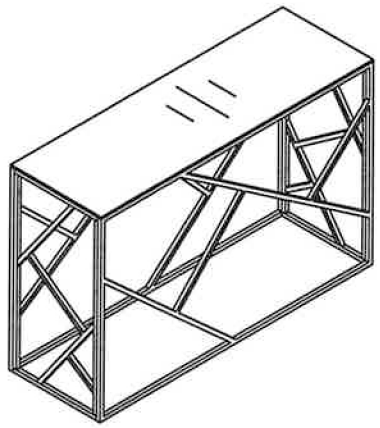
4