ASSEMBLY INSTRUCTIONS
COASTER FINE FURNITURE

Fine Furniture for every stage of life

300525F(B1&B2)
Full Bed

REVISION 0 : 11/20/2018
REVISION 1 : 08/21/2020

ITEM:300525F(B1&B2)

ASSEMBLY INSTRUCTIONS

ASSEMBLY TIPS:

1. Remove hardware from box and sort by size.
2. Please check to see that all hardware and parts are present prior to start of assembly.
3. Please follow attached instructions in the same sequence as numbered to assure fast & easy assembly.

WARNING!

1. Don't attempt to repair or modify parts that are broken or defective. Please contact the store immediately.
2. This product is for home use only and not intended for commercial establishments.

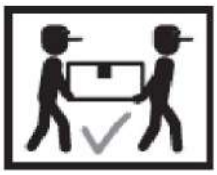

ASSEMBLY TIME | 30 MINUTES

PARTS IDENTIFICATION

B1(BOX1)

AV	HEADBOARD PANEL	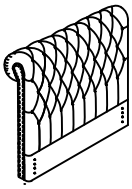	1PC
BV	HEADBOARD LEG		2PCS

B2(BOX2)

CV	FOOTBOARD LEG		2PCS
EV	FOOTBOARD PANEL	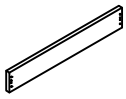	1PC
GV	BED SLAT	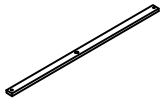	4PCS
HBV	300525F(B1) FROM BOX1 HEADBOARD COMPLETE	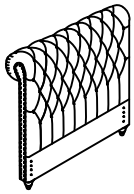	1PC
DV	BED RAIL		2PCS
FV	CENTER RAIL SUPPORT WITH LEVELER	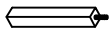	4PCS
FBV	300525F(B2) FROM BOX2 FOOTBOARD COMPLETE	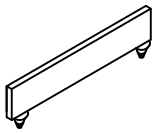	1PC

ITEM:300525F(B1&B2)

ASSEMBLY INSTRUCTIONS

ASSEMBLY TIPS:

1. Remove hardware from box and sort by size.
2. Please check to see that all hardware and parts are present prior to start of assembly.
3. Please follow attached instructions in the same sequence as numbered to assure fast & easy assembly.

WARNING!

1. Don't attempt to repair or modify parts that are broken or defective. Please contact the store immediately.
2. This product is for home use only and not intended for commercial establishments.

HARDWARE IDENTIFICATION

Z-B2(BOX2)-HARDWARE PACK IS LOCATED IN 300525F(B2)

1	ALLEN WRENCH (5MM-RBW)		1PC
2	BOLT (Ø 5/16 "X32mm-RBW)		24PCS
3	HEADBOARD CORNER BRACKET -RIGHT (200mmX60mmX40mmX2mm-RBW)		2PCS
4	HEADBOARD CORNER BRACKET -LEFT (200mmX60mmX40mmX2mm-RBW)	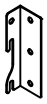	2PCS
5	LOCK WASHER (Ø 5/16 "-RBW)		24PCS
6	FLAT WASHER (Ø 5/16 "-RBW)		24PCS
7	FLAT HEAD SCREW (m4x30mm-RBW)	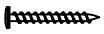	8PCS

NOTE:

Phillips hesd screw driver is required in the assemply process; however, manufacturer does not providde this item.

ITEM:**300525F(B1&B2)**

ASSEMBLY INSTRUCTIONS

STEP 1

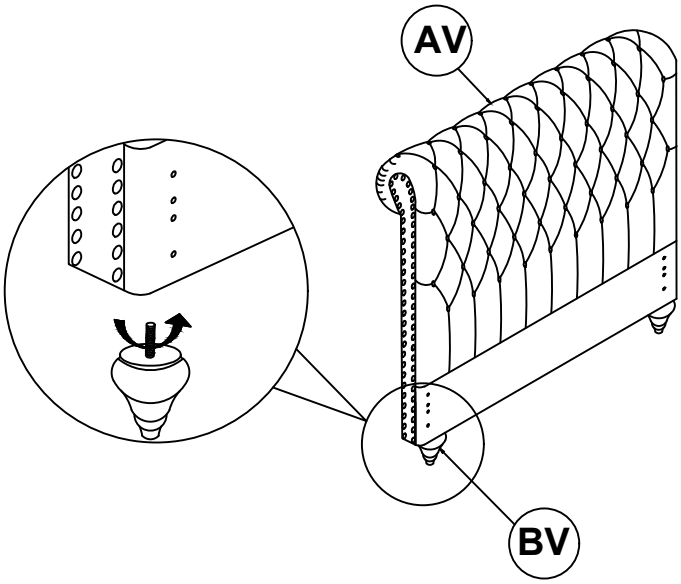

STEP 2

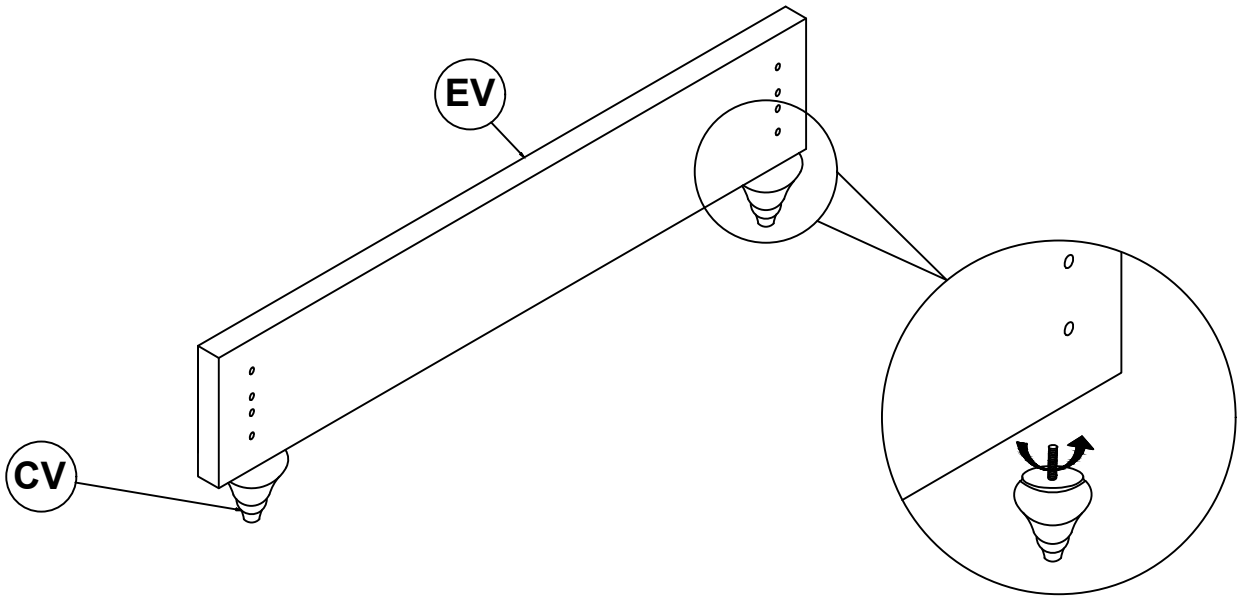

ITEM:**300525F(B1&B2)**

ASSEMBLY INSTRUCTIONS

STEP 3

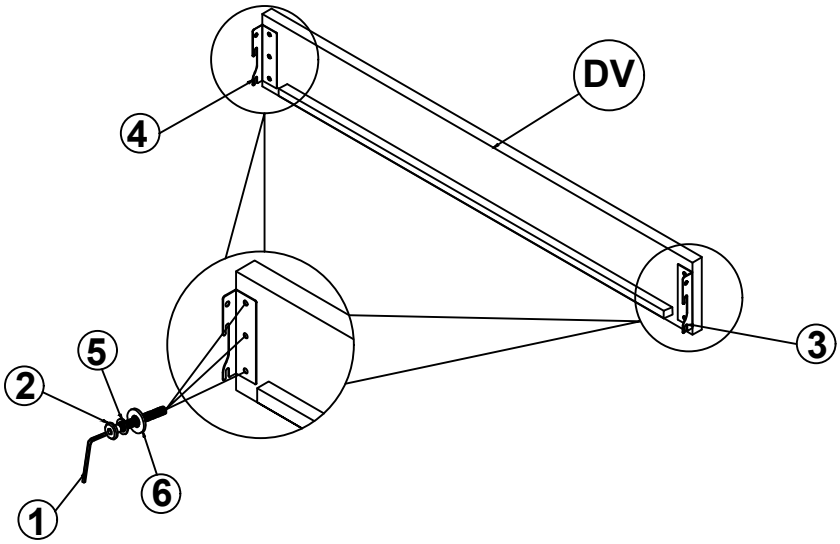

STEP 4

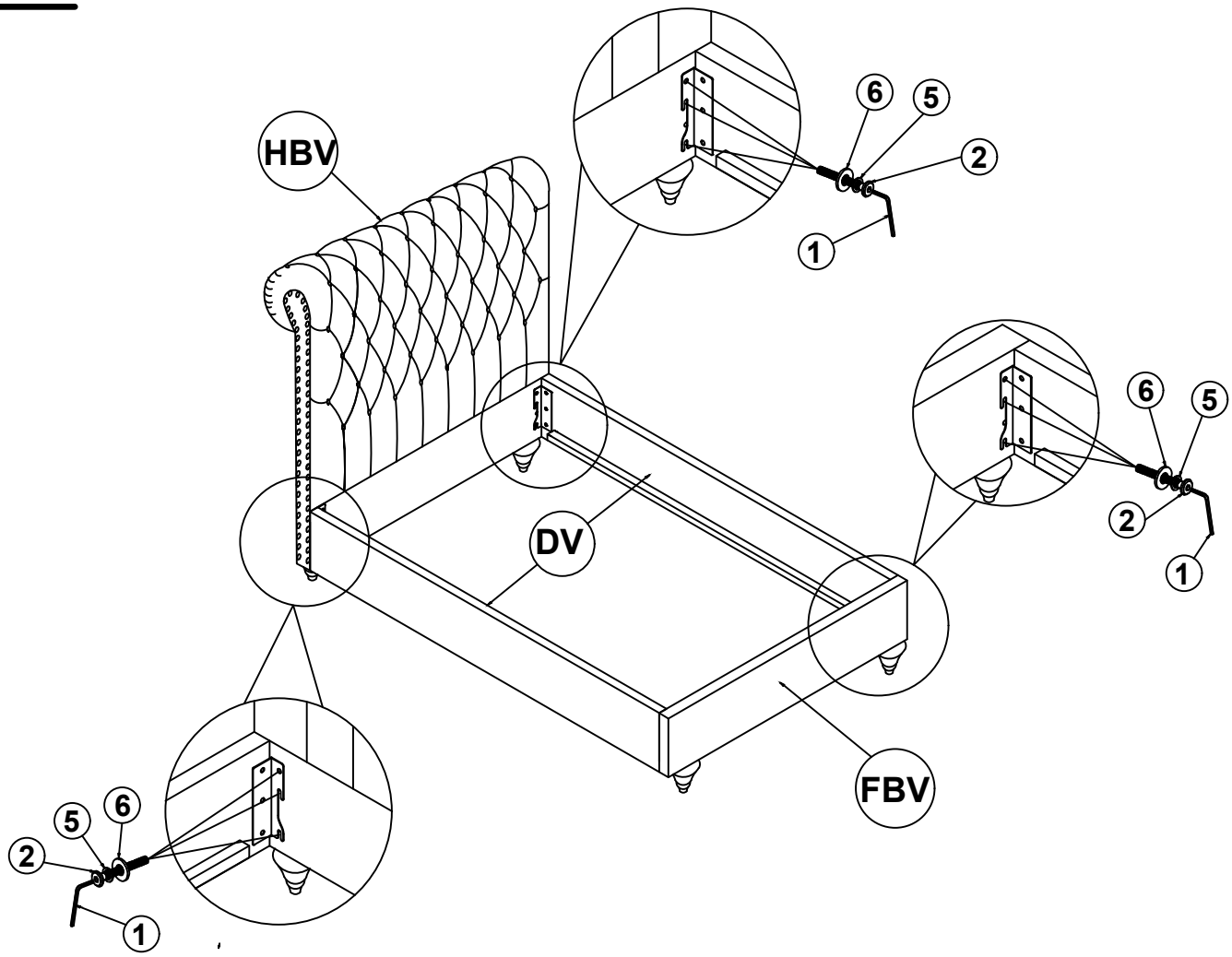

ITEM:**300525F(B1&B2)**

ASSEMBLY INSTRUCTIONS

COASTER FINE FURNITURE

STEP 5

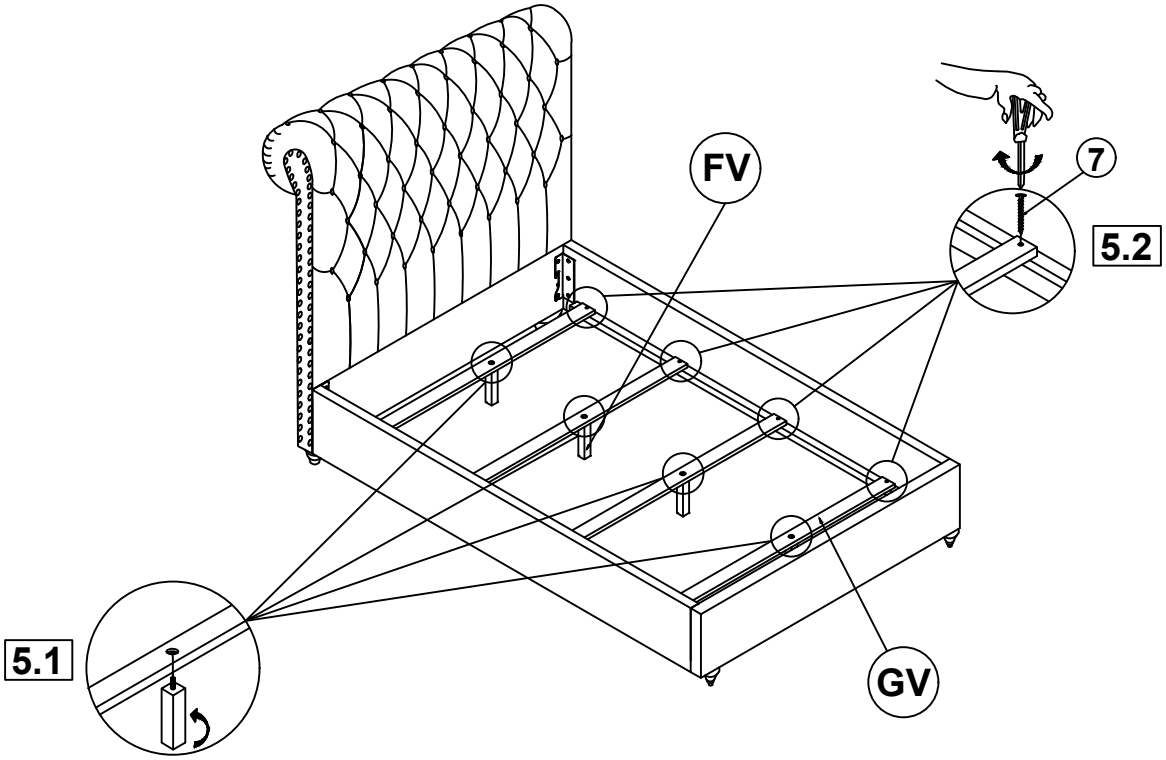

STEP 6
COMPLETE

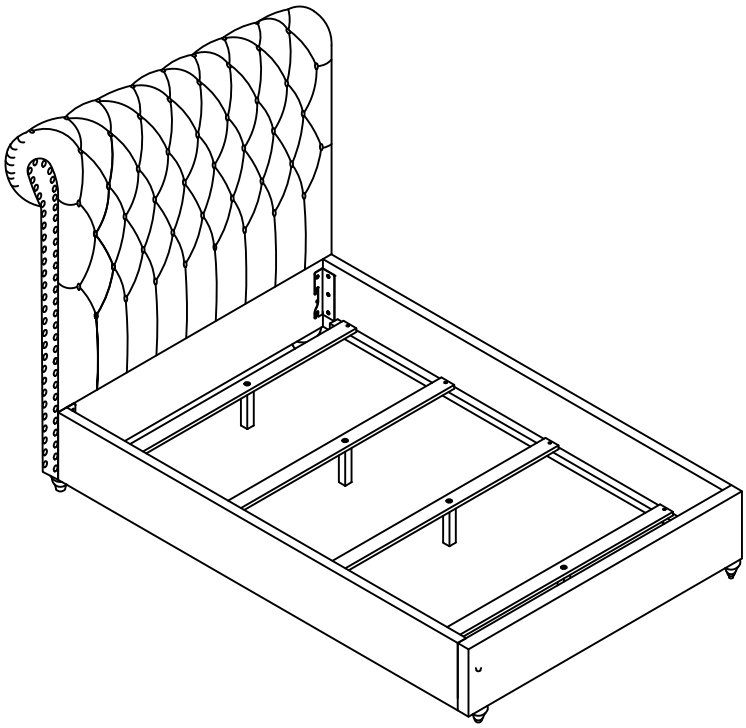

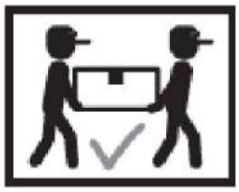

ITEM:**300525F(B1&B2)**

COASTER FINE FURNITURE

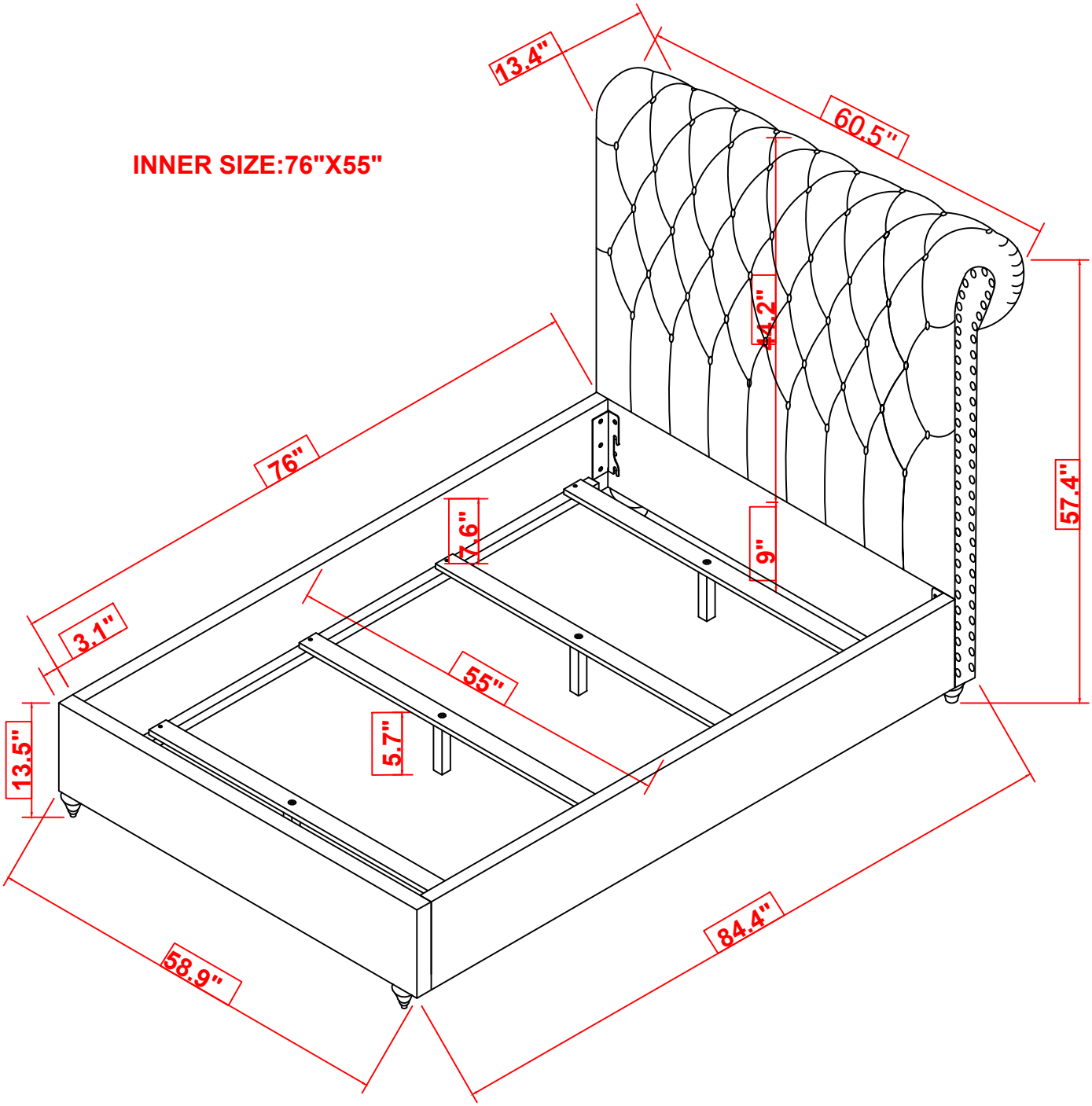

NOTE: Dimension tolerance±5%