COASTER®
FINE FURNITURE

ASSEMBLY INSTRUCTIONS
COASTER FINE FURNITURE

Fine Furniture for every stage of life

2408
Bar Stool

REVISION 0: 04/02/2018
REVISION 1: 06/15/2020

ITEM:2408

ASSEMBLY INSTRUCTIONS

COASTER FINE FURNITURE

ASSEMBLY TIPS:

1. Remove hardware from box and sort by size.
2. Please check to see that all hardware and parts are present prior to start of assembly.
3. Please follow attached instructions in the same sequence as numbered to assure fast & easy assembly.

WARNING!

1. Don't attempt to repair or modify parts that are broken or defective.
   Please contact the store immediately.
2. This product is for home use only and not intended for commercial establishments.

ASSEMBLY TIME	30 MINUTES

PARTS IDENTIFICATION

AN	LOWER LEG	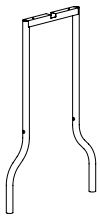	1PC
BN	UPPER LEG	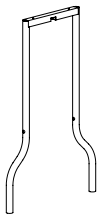	1PC
CN	SWIVEL PLATE		1PC
DN	BOTTOM RING	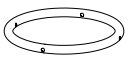	1PC
EN	CUSHION SEAT		1PC

NOTE: QUANTITIES SHOWN ARE FOR ONE STOOL

ITEM:2408

COASTER FINE FURNITURE

HARDWARE IDENTIFICATION

1	ALLEN BOLT-LARGE (1/4" x 1-1/2"L - SR)		8PCS
2	ALLEN BOLT-SMALL (1/4" x 3/4"L - SR)		4PCS
3	SCREW TUBE (1/4" x 5/8"L - SR)		4PCS
4	WASHER (Φ18mm - SR)		4PCS
5	HEX NUT (5 x 10H mm - SR)		4PCS
6	PLASTIC END CAP (Φ25 x 22mm - BLK)		4PCS
7	ALLEN WRENCH (4 x 20W x 57L mm - SR)		2PCS
8	OPEN END WRENCH (60 x 15mm - SR)		1PC

NOTE: QUANTITIES SHOWN ARE FOR ONE STOOL

ITEM:2408

ASSEMBLY INSTRUCTIONS

STEP 1

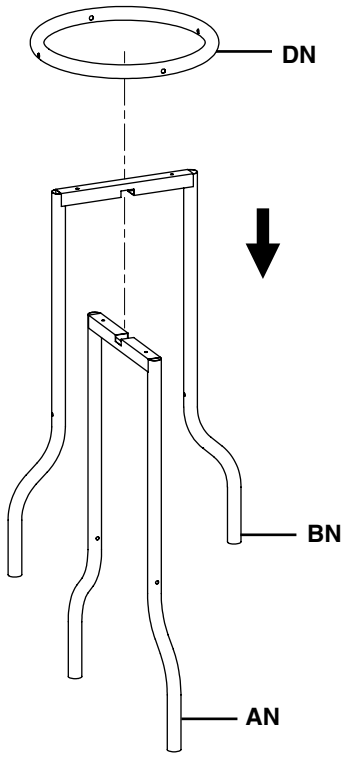

STEP 2

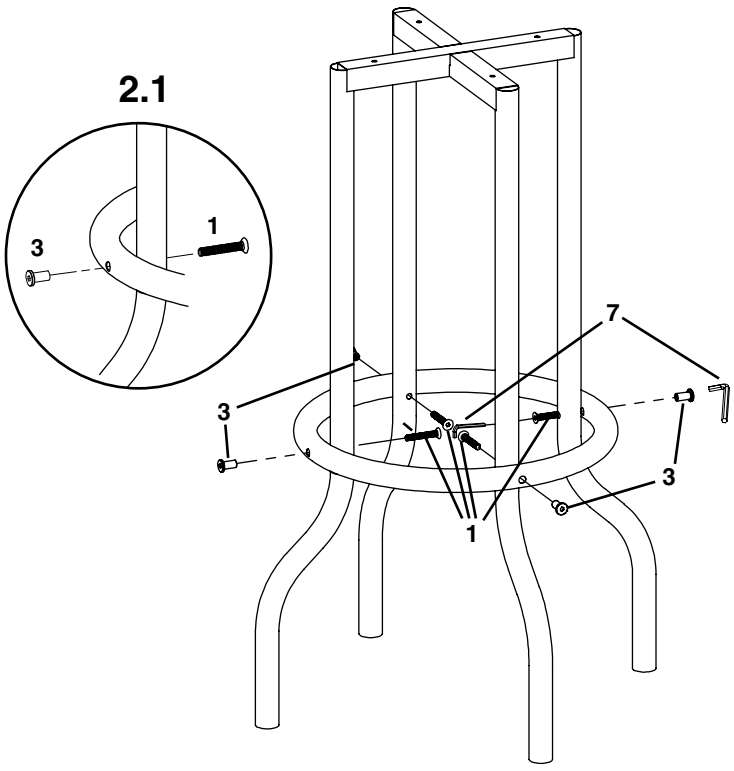

ITEM:2408

ASSEMBLY INSTRUCTIONS

COASTER FINE FURNITURE

STEP 3

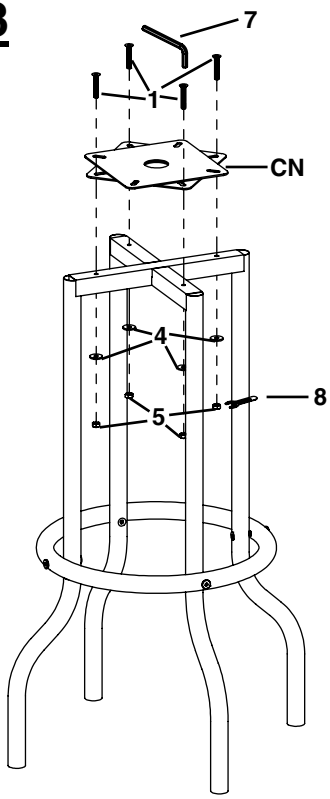

STEP 4

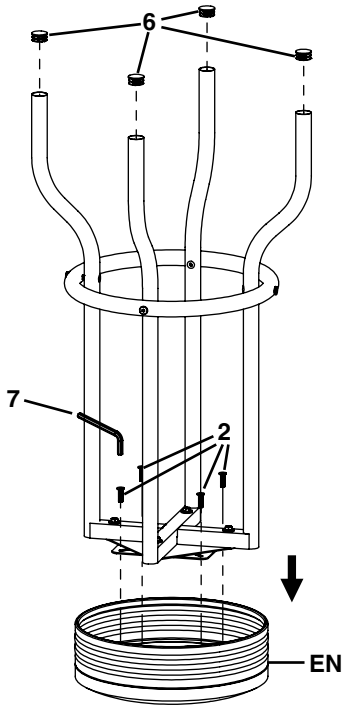

STEP 5
COMPLETE

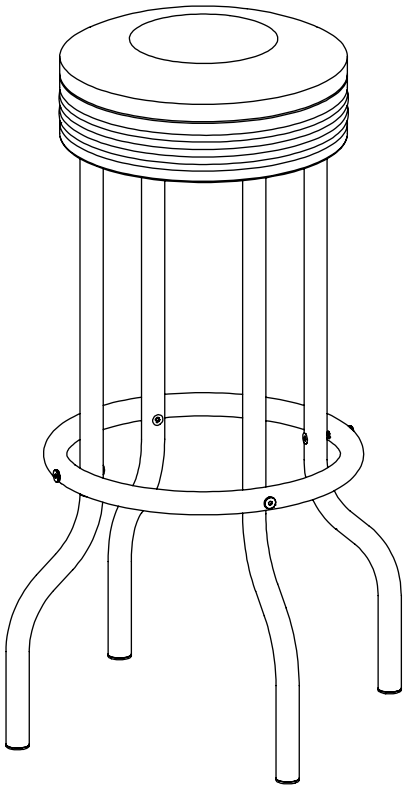

ITEM:2408

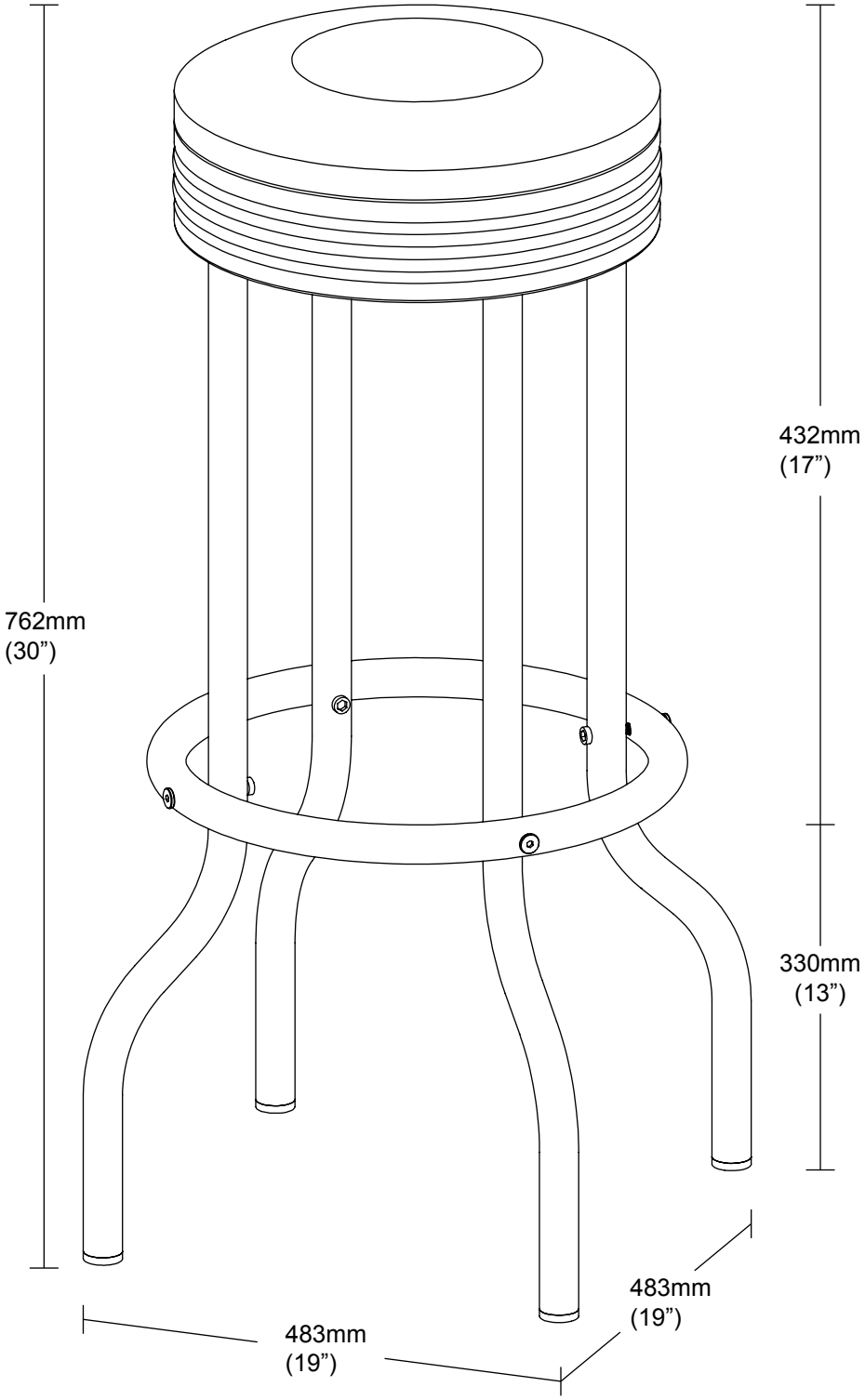

Note : Dimension tolerance ±5%