ASSEMBLY INSTRUCTIONS
COASTER FINE FURNITURE

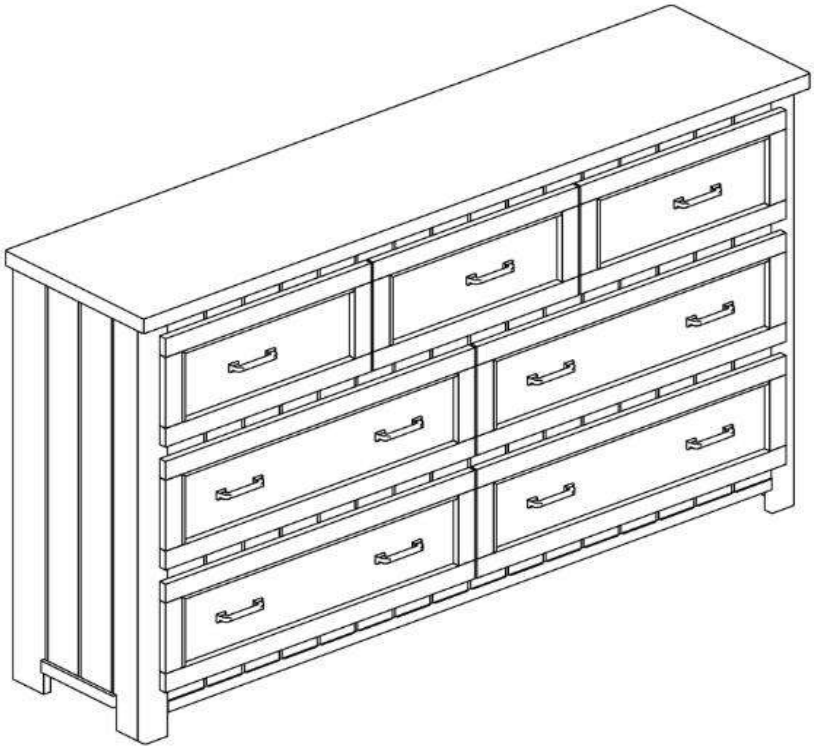

Fine Furniture for every stage of life

400933
Dresser

REVISION 0 : 10/20/2016
REVISION 1 : 03/10/2020

ITEM: **400933**

COASTER FINE FURNITURE

ASSEMBLY INSTRUCTIONS

ASSEMBLY TIPS:

1. Remove hardware from box and sort by size.
2. Please check to see that all hardware and parts are present prior to start of assembly.
3. Please follow attached instructions in the same sequence as numbered to assure fast & easy assembly.

WARNING!

1. Don't attempt to repair or modify parts that are broken or defective. Please contact the store immediately.
2. This product is for home use only and not intended for commercial establishments.

ASSEMBLY TIME	15 MINUTES

PARTS IDENTIFICATION

A	DRESSER		1PC
B	CENTER SUPPORT LEG WITH LEVELER	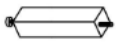	1PC

STEP 1

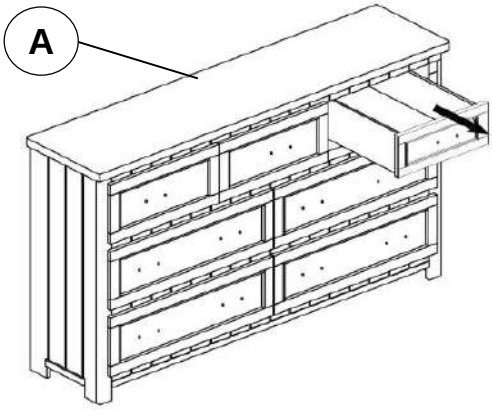

STEP 2

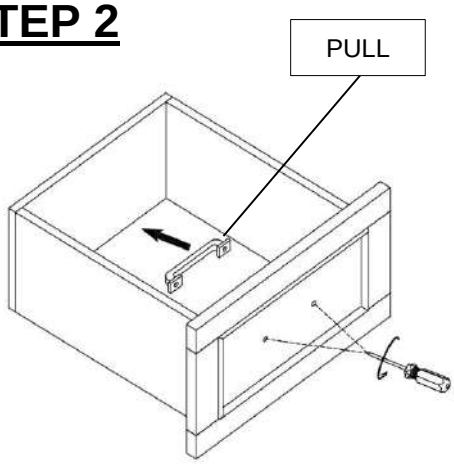

STEP 3

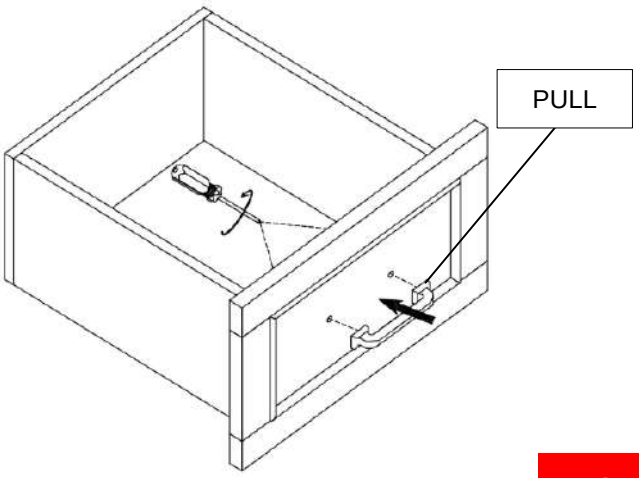

STEP 4

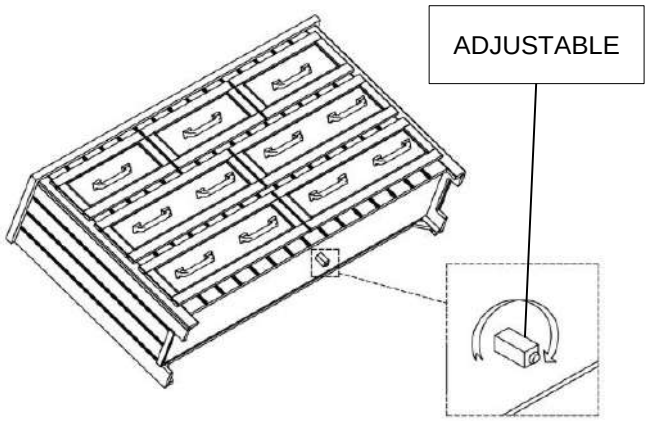

ITEM: **400933**

STEP 5
COMPLETE

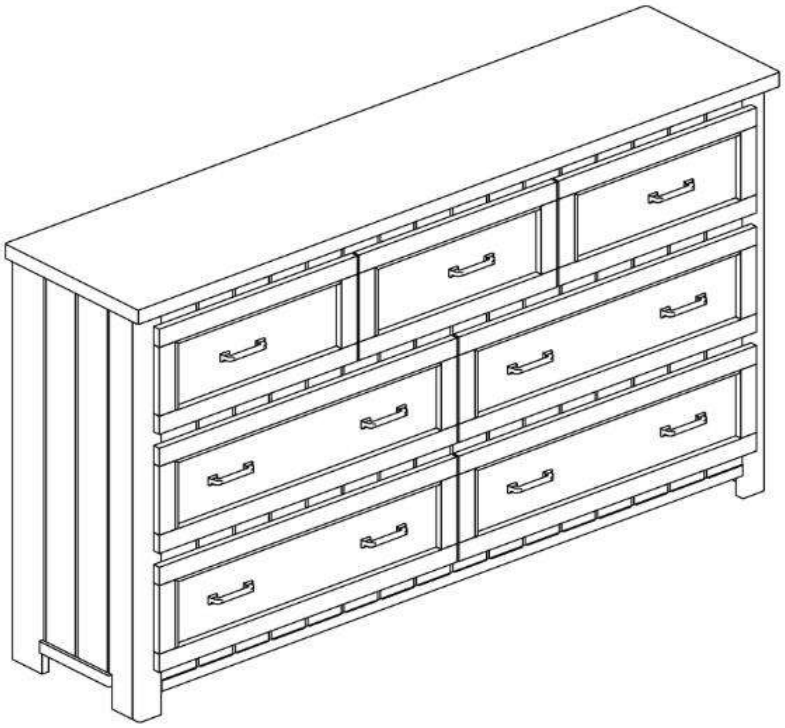

ITEM: **400933**

ANTI-TIPPING INSTALLMENT INSTRUCTIONS

FURNITURE TIPPING RESTRAINT

WARNING

Injury may result from tipping furniture.
This restraint may protect against tipping furniture.
Do not allow children to climb on furniture.
This restraint is not a substitute for proper adult supervision.
Failure to detach this restraint before moving the furniture may result in injury and damage.

1. Attach one of the mounting brackets securely to the back edge of the furniture. Use the short screw.
2. Determine where the furniture is to be placed and mark location on the wall for the mounting bracketscrew hole approximately 2" below the bracket mounted to the edge of the furniture.
3. Drill a 3/16" hole in the wall. Press the plastic wall plug into the hole and gently tap until the flange onthe wall plug is against the wall surface.
4. Position the bracket over the wall plug and use the long screw to securely attach the bracket to the wall.
5. Place the furniture so the bracket on the back edge is in line with the bracket on the wall.
6. Lace an end of the cable tie down through each bracket. Bring both ends together and slide the beaded end of the cable tie through the keyhole shaped slot on the other end until snug. Pull down onthe beaded end until it snap locks into the keyhole slot.
7. To double lock return the beaded end back through the keyhole as shown.
8. Check to make sure the cable tie is securely laced and locked to the brackets.

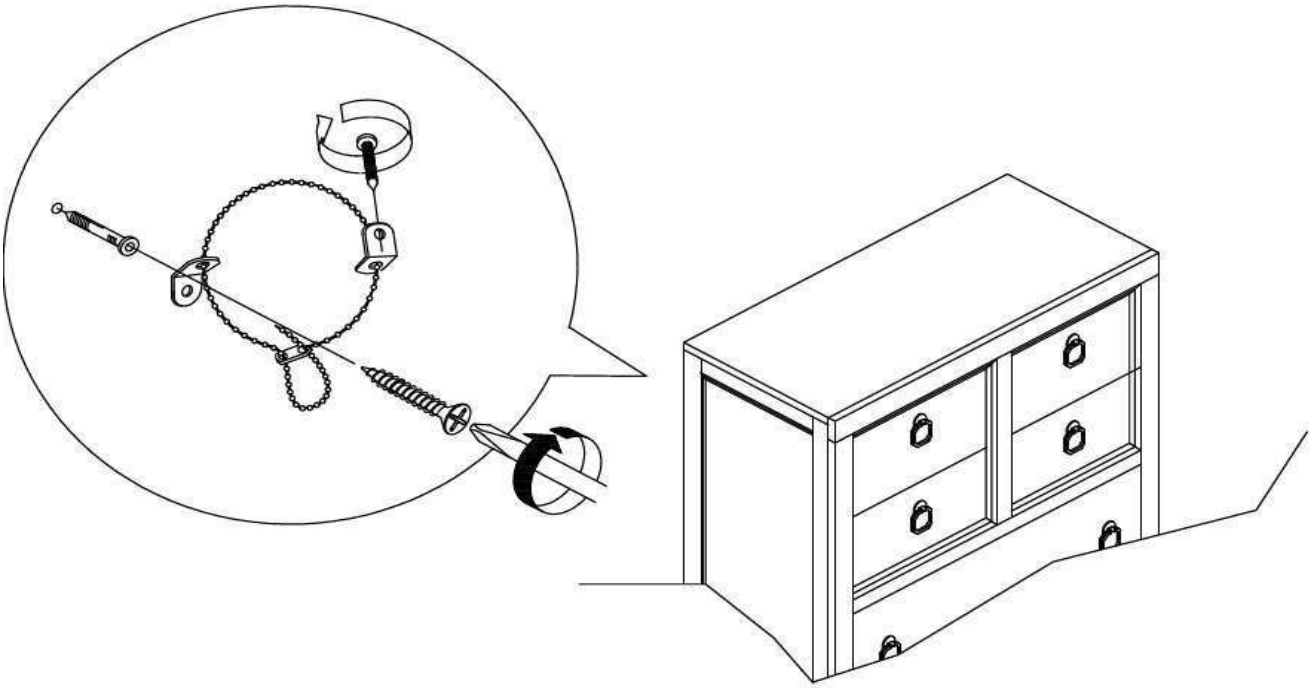

ITEM: **400933**

COASTER
FINE FURNITURE

INNER SIZE OF DRAWER : 13" x 16" x 7"
INNER SIZE OF DRAWER : 13" x 26" x 7"

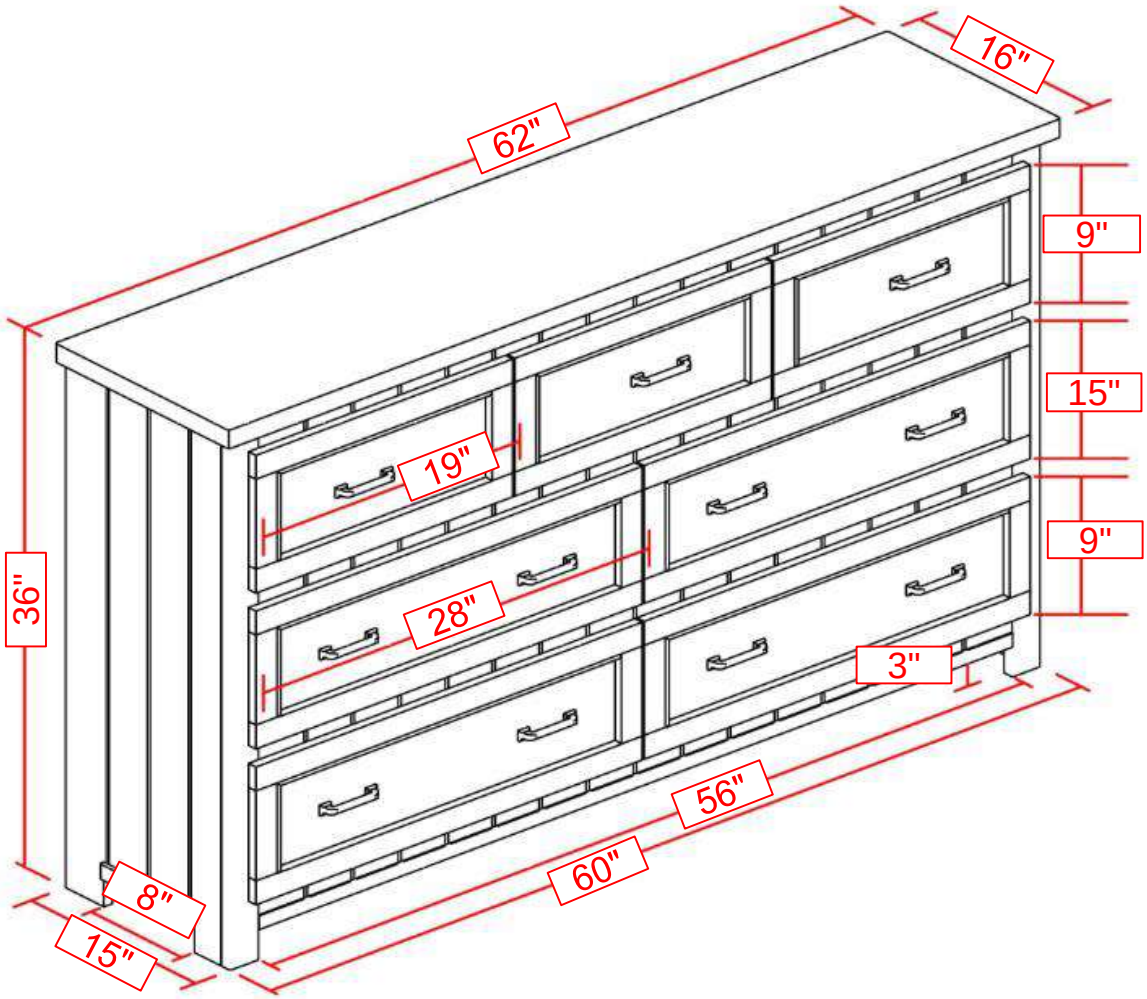

Note : Dimension tolerance ±5%