COASTER®
FINE FURNITURE

ASSEMBLY INSTRUCTIONS
COASTER FINE FURNITURE

Fine Furniture for every stage of life

900749
Grandfather Clock

ITEM:900749

COASTER
FINE FURNITURE

Your clock is fitted with a Westminster Chiming movement. This has an automatic night silence function that silences the Chimes between 10.00 P.M. and 6.00 A.M.(last strike 9:00PM, first strike 6:00AM).
Please make sure you have 2 x D Alkaline batteries, as these are not included. You will also need a screwdriver.

ALKALINE BATTERIES REQUIRED

SIZE D

2 PCS

ASSEMBLY TOOLS REQUIRED

ASSEMBLY TIPS:

1. Remove hardware from box and sort by size.
2. Please check to see that all hardware and parts are present prior to start of assembly.
3. Please follow attached instructions in the same sequence as numbered to assure fast & easy assembly.

Warning!

1. Don't attempt to repair or modify patrs that are broken or defective. Please contact the store immediatelly.
2.This product is for home use only and not intended for commercial establishments.

CAUTION: PRODUCT IS FRAGILE. TO AVOID BREAKAGE AND POSSIBLE INJURY HANDLE WITH CARE!

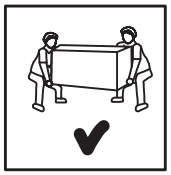

ASSEMBLY TIME PER UNIT:	20 MINUTES

PARTS IDENTIFICATION

	PART NAME	FIGURE	QTY		PART NAME	FIGURE	QTY
A	TOP UNIT		1PC	E	BACK PANEL		1PC
B	FRONT DOOR	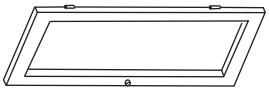	1PC	F	BASE UNIT	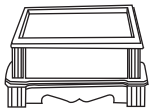	1PC
				G	DECORATION CHAINS		4PCS
C	LEFT SIDE PANEL		1PC	H	PENDULUM	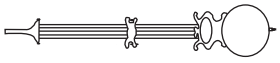	1PC
D	RIGHT SIDE PANEL		1PC	I	DECORATION WEIGHTS		2PCS

Z HARDWARE IDENTIFICATION

	DESCRIPTION	FIGURE	QTY		DESCRIPTION	FIGURE	QTY
1	BOLT ϕ 8*40mm	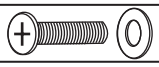	8PCS	4	LONG SCREW	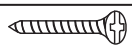	1PC
2	FIXING BARS		2PCS	5	SHORT SCREW		1PC
3	CABLE TIE	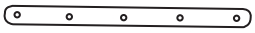	1PC	6	PLASTIC ANCHOR	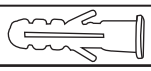	1PC

ITEM:900749

COASTER FINE FURNITURE

NOTES: PLEASE MAKE SURE CLOCK IS IN LEVEL POSITION, OTHERWISE IT WILL NOT OPERATE PROPERLY.

STEP 1-1

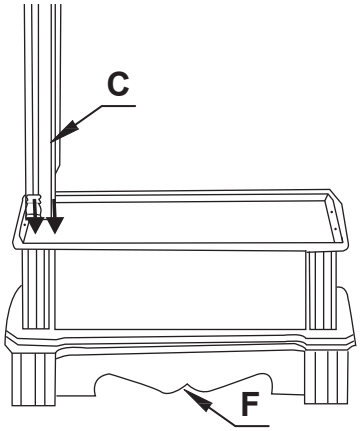

STEP 1-2

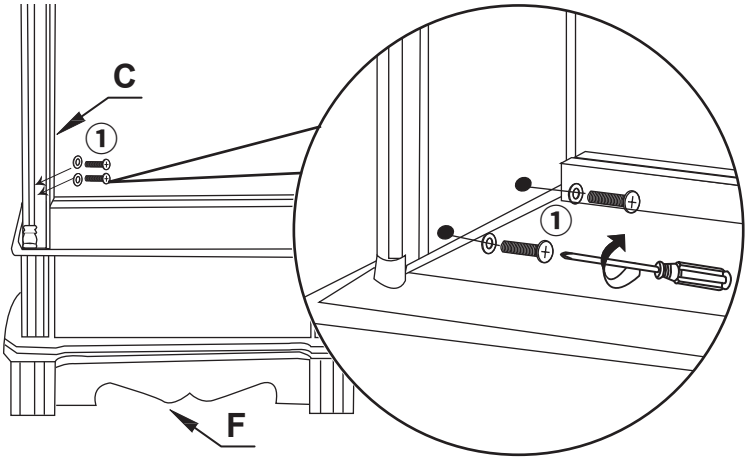

STEP 2-1

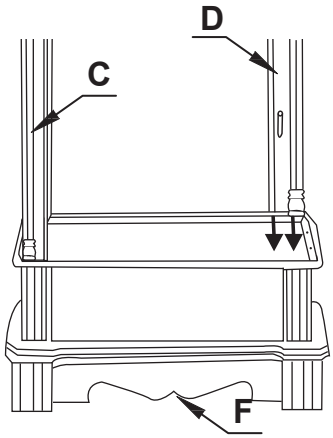

STEP 2-2

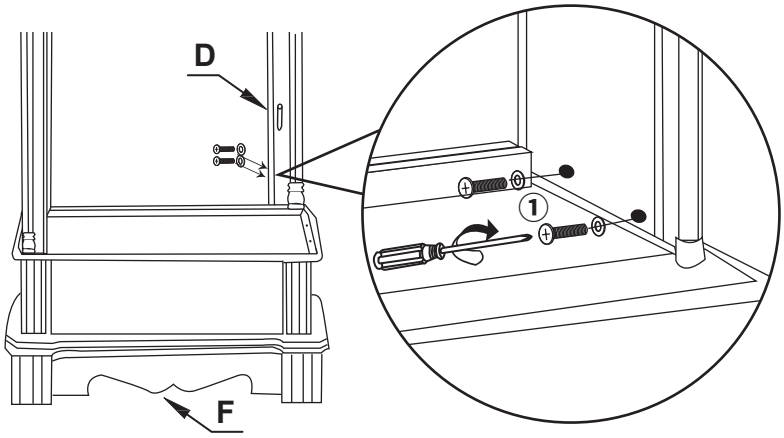

STEP 3

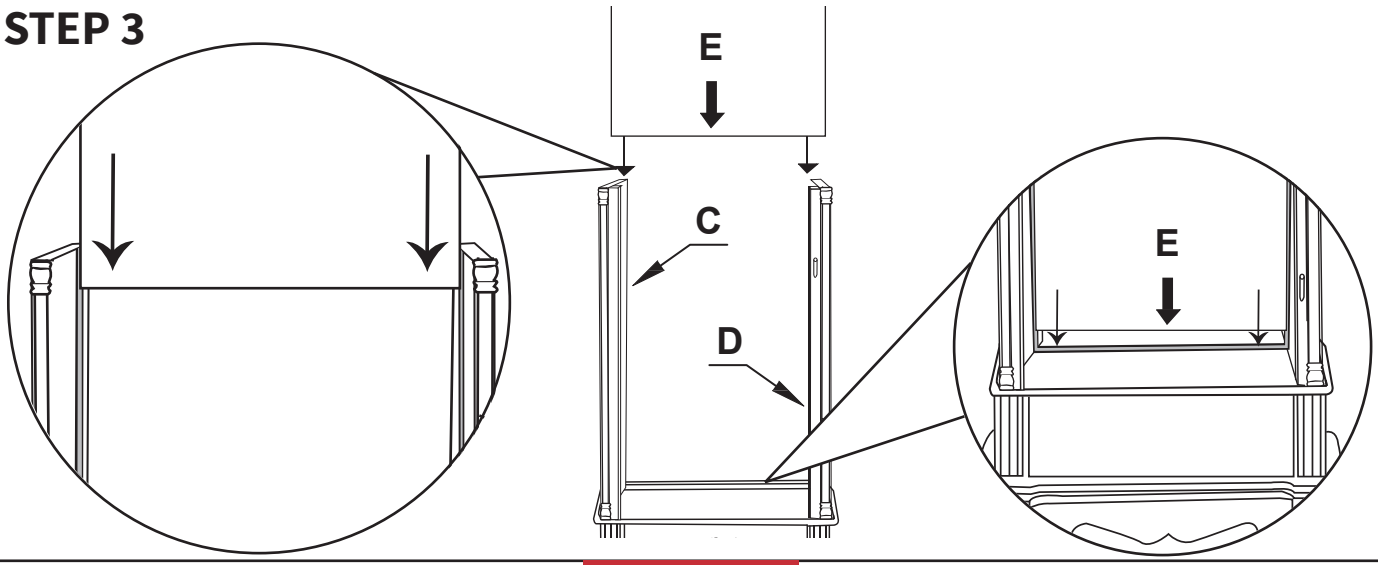

ITEM:900749

COASTER
FINE FURNITURE

STEP 4-1

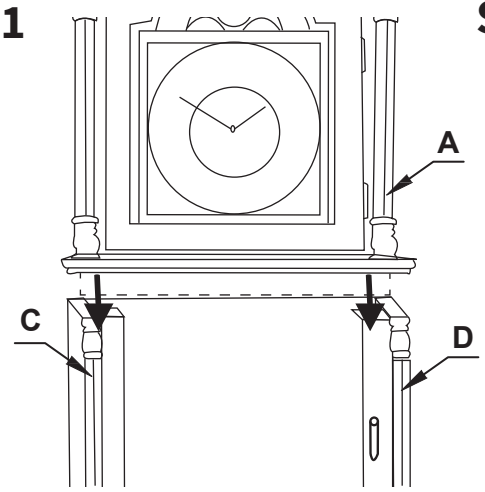

STEP 4-2

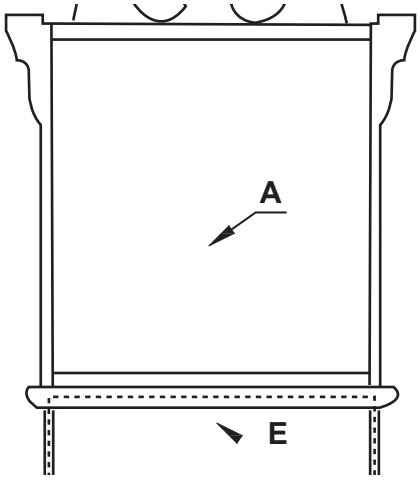

STEP 5

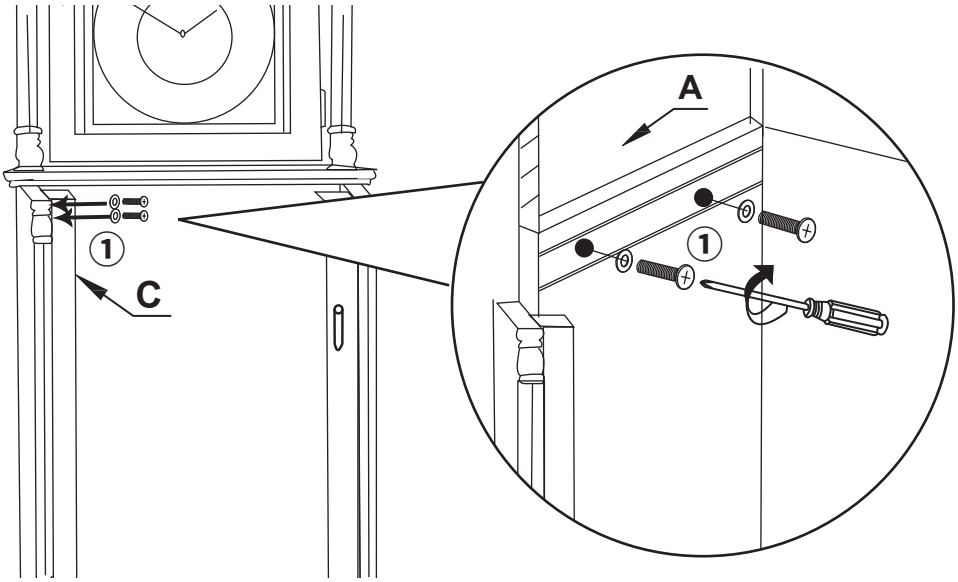

STEP 6

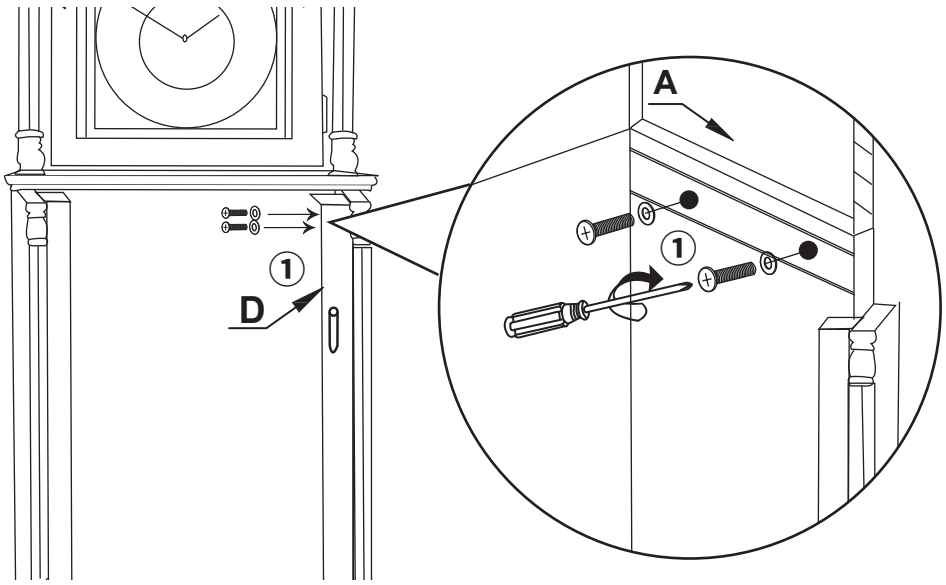

ITEM:900749

COASTER
FINE FURNITURE

STEP 7-1

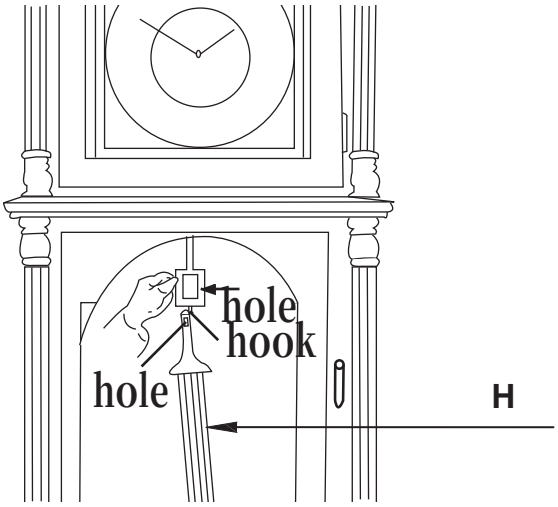

STEP 7-2

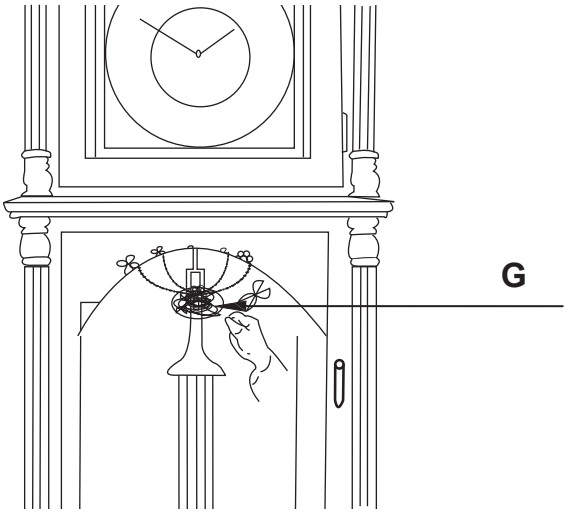

STEP 8

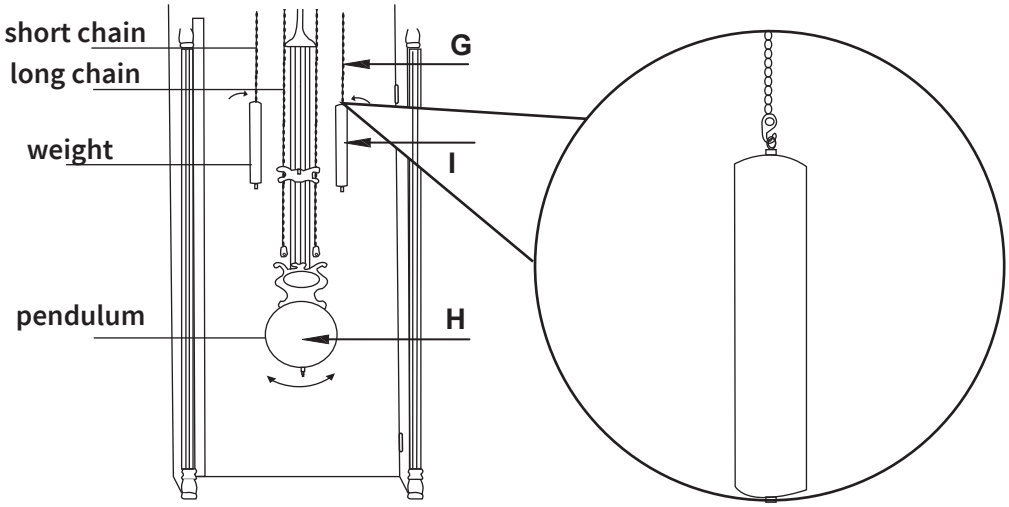

STEP 9

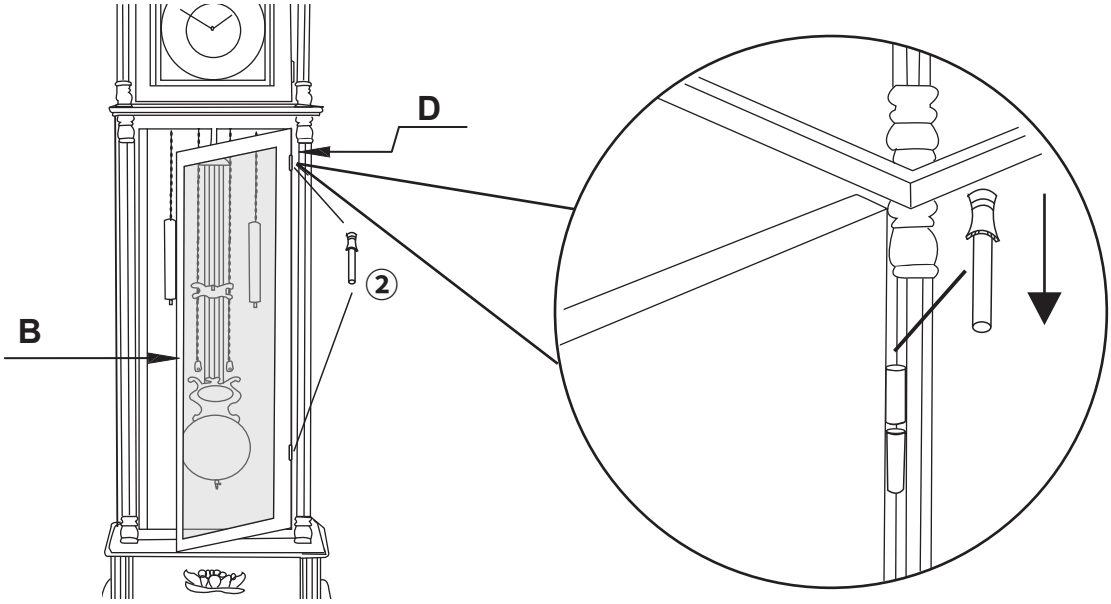

ITEM:900749

COASTER
FINE FURNITURE

STEP 10

ATTENTION: ANTI TIPPING SAFEGUARD

BACK OF THE CLOCK

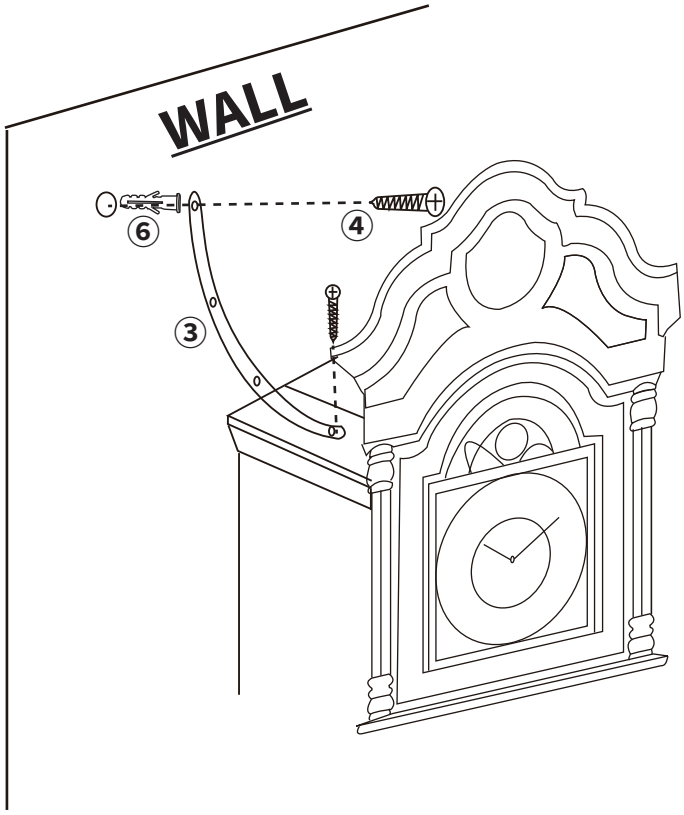

FURNITURE TIPPING RESTRAINT

WARNING

Injury may result from tipping furniture.

This restraint is not a substitute for proper adult supervision.

This restraint may provide protection against tipping furniture.

Do not allow children to climb on furmiture.

Failure to detach this restraint before moving furniture may result in injury and damage.

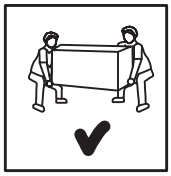

ITEM:900749

COASTER FINE FURNITURE

Operating the clocks as following pictures.

***DON'T PUT BATTERIES INTO THE MOVEMENT BEHIND OF PENDULUM DRIVER.**

1.TO START THE CLOCK

Lift the up-cover from the back of the top unit(A), you will find a battery holder. Open the battery cover, insert 2 new 1.5 volt "D" alkaline batteries into the Battery Holder and making sure the battery is as indicated(picture 1). Push the bob of pendulum(H) leftwards to let the clock run(picture 3).

2.TO SET TIME: Turn the minute hand(Longer hand)clock wise tenderly until the desired time is obtained on the dial. Do not push too hard or turn the hand counter clockwise (never turn the short hand), otherwise it will cause damage of movement(picture 4).

3. TO ADJUST MELODY SELECTION: The button in position(🔔): this selection will only have the striking sound every hour. The button in position(⊞): this selection will have both the striking sound and Westminster chime every hour. The button in position(♫): this selection will only have the Westminster chime every hour. The clock will not sound from 10:00 pm to 5:59 am(picture 2).

4.TO ADJUST TIME: Press the "time adj" button for adding the time of striking. For example, if the clock counts 2 times at 4 o'clock, please press button two times then it gives corrected strike(picture 2).

5. TO ADJUST VOLUME CONTROL: To turn button rightward or leftward to obtain the desired sound(picture 2).

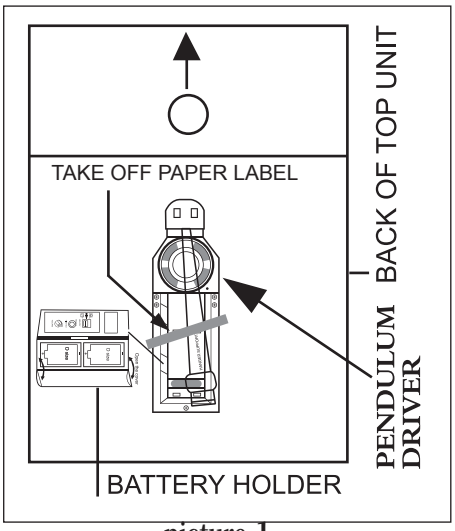

picture 1

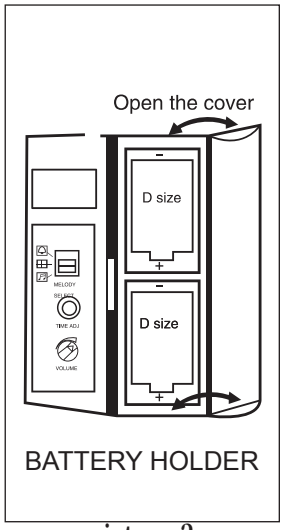

picture 2

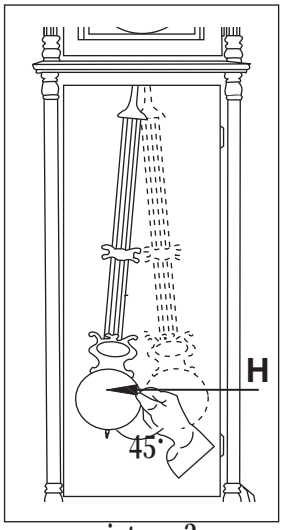

picture 3

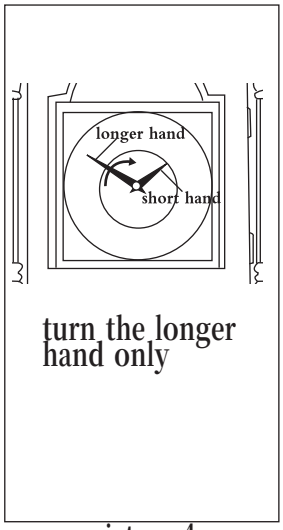

picture 4

COASTER
FINE FURNITURE

CAUTION

Do not mix Old and New batteries. Do not mix Alkaline, and Standard(Carbon - Zinc) or Rechargeable(Nickel - Cadmium) batteries.

TROUBLESHOOTING

Here are a few symptoms that are associated with 'Defective Batteries' or 'Incorrect Installation' and do not indicate that the clock itself is defective:

Problem
Your clock strikes six(6) times on every hour.
Solution
Change the chime section batteries, and set time and chime again by following "SETTING TIME AND CHIME"procedure.

Problem
Your clock starts to chime erratically on every hour.
Solution
Press the Red "Set" Button, the clock will chime, and increase one chime per push, push to the correct chime.
If this method still does not solve the problem, replace the chime battery, and set time and chime again by following the "SETTING TIME AND CHIME" procedure.

Problem
Your clocks chimes are getting quieter and quieter.
Solution
Change the chiming section batteries and turn the volume down to about half way.

Problem
Your clock does not chime at 10 pm.
Solution
Your clock has an Automatic night mute with the last strike at 9pm and the first strike at 6am.

Problem
Can I change when the night mute starts and stops?
Solution
No, this function is not available.

Problem
You clock does not chime during the day.
Solution
Reset the clock according to the "SETTING TIME AND CHIME" procedure.

ITEM:900749

COASTER
FINE FURNITURE