COASTER®
FINE FURNITURE

ASSEMBLY INSTRUCTIONS
COASTER FINE FURNITURE

Fine Furniture for every stage of life

182048
Bar Stool

REVISION 0 : 05/05/2017
REVISION 1 : 03/25/2019
REVISION 2 : 08/15/2019

COASTERFURNITURE.COM

ITEM: 182048

ASSEMBLY INSTRUCTIONS

COASTER®
FINE FURNITURE

ASSEMBLY TIPS:
1. Remove hardware from box and sort by size.
2. Please check to see that all hardware and parts are present prior to start of assembly.
3. Please follow attached instructions in the same sequence as numbered to assure fast & easy assembly.

WARNING!
1. Don't attempt to repair or modify parts that are broken or defective. Please contact the store immediately.
2. This product is for home use only and not intended for commercial establishments.

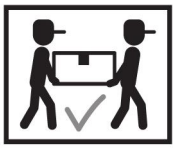

ASSEMBLY TIME	20 MINUTES

PARTS IDENTIFICATION

A LEG A 2PCS

B LEG B 2PCS

C FOOTREST 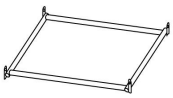 1PC

D UPPER SEAT SUPPORT FRAME 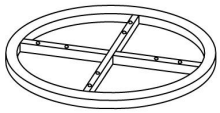 1PC

E BOTTOM SEAT SUPPORT FRAME 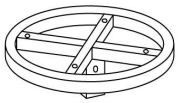 1PC

F SWIVEL PLATE 1PC

G SEAT 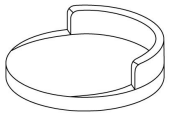 1PC

HARDWARE IDENTIFICATION

1 LONG BOLT 4PCS

2 SHORT BOLT 20PCS

3 ALLEN KEY 1PC

ITEM: 182048

ASSEMBLY INSTRUCTIONS

COASTER FINE FURNITURE

STEP 1

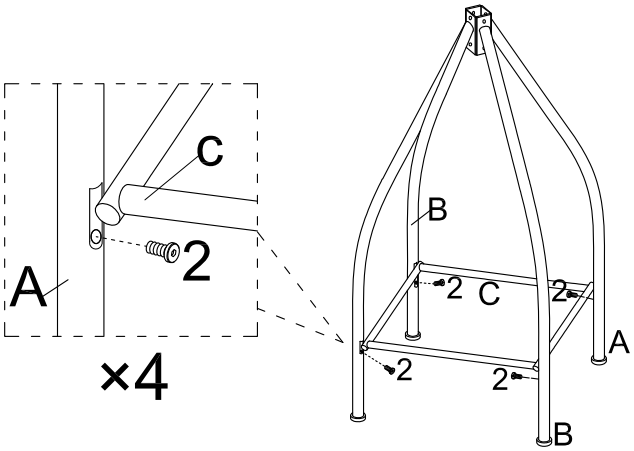

STEP 2

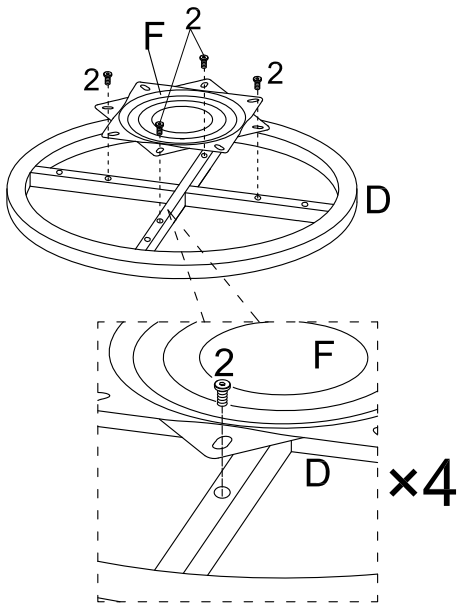

STEP 3

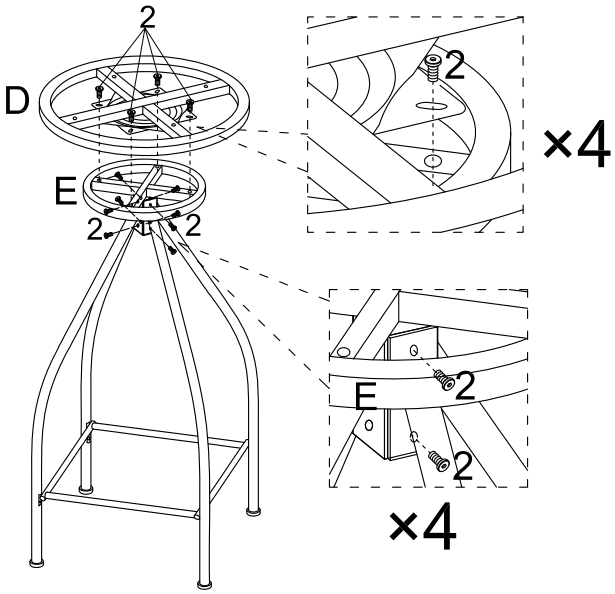

STEP 4

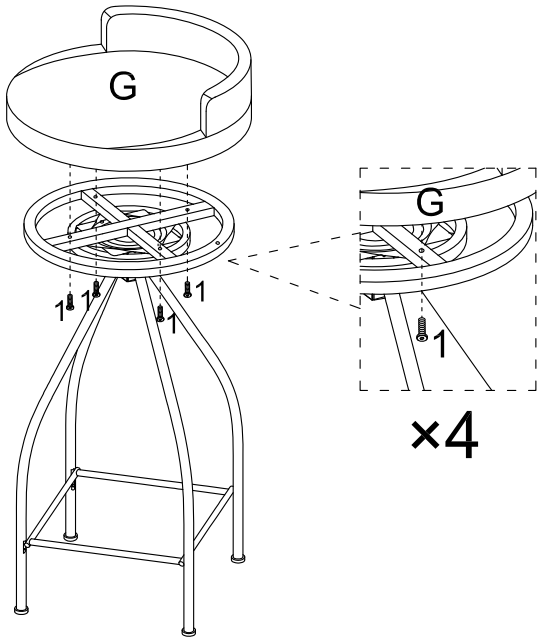

ITEM: 182048

ASSEMBLY INSTRUCTIONS

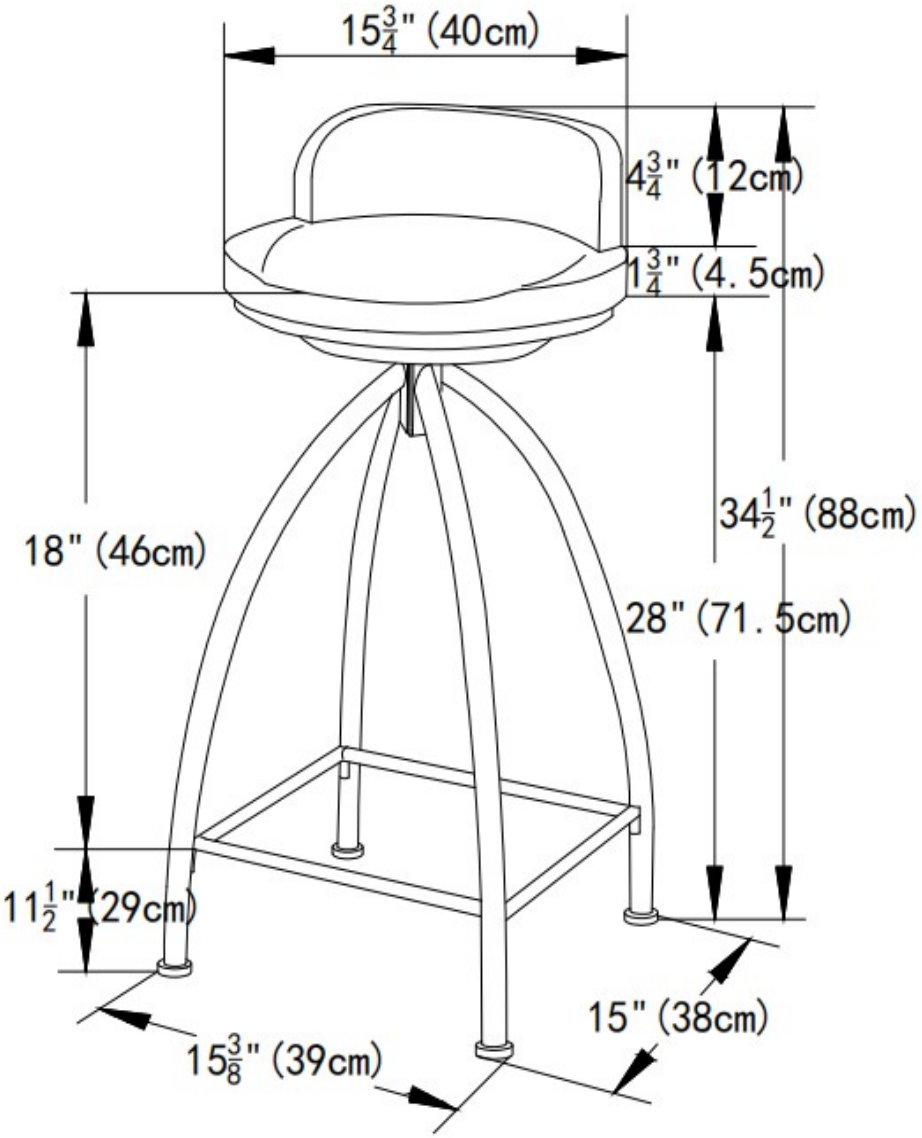

Note : Dimension tolerance ±5%