COASTER®
FINE FURNITURE

ASSEMBLY INSTRUCTIONS
COASTER FINE FURNITURE

Fine Furniture for every stage of life

802543
BOOKCASE

REVISION 0 : 05/25/2017
REVISION 1 : 07/01/2019

COASTERFURNITURE.COM

ITEM:**802543**

COASTER
FINE FURNITURE

ASSEMBLY INSTRUCTIONS

ASSEMBLY TIPS:

1. Remove hardware from box and sort by size.
2. Please check to see that all hardware and parts are present prior to start of assembly.
3. Please follow attached instructions in the same sequence as numbered to assure fast & easy assembly.

WARNING!

1. Don't attempt to repair or modify parts that are broken or defective. Please contact the store immediately.
2. This product is for home use only and not intended for commercial establishments.

ASSEMBLY TIME | 30 MINUTES

PARTS IDENTIFICATION

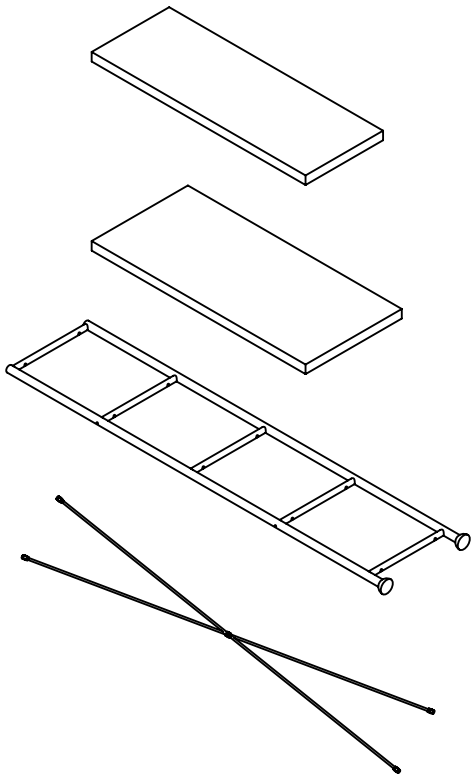

A	SHELF	4 PCS
B	TOP PANEL	1 PC
C	METAL FRAME	2 PCS
D	SUPPORT BAR	1 PC

HARDWARE IDENTIFICATION

Z NO	DESCRIPTION	FIGURE	Q'TY
1	LARGE BOLT M6x44mm BLK		20 PCS
2	SHORT BOLT M6x15mm BLK		4 PCS
3	ALLEN WRENCH 4mm SR		1 PC

NOTE:

Phillips head screw driver is required in the assembly process; however, manufacturer does not provide this item.

ITEM:**802543**

COASTER
FINE FURNITURE

STEP 1

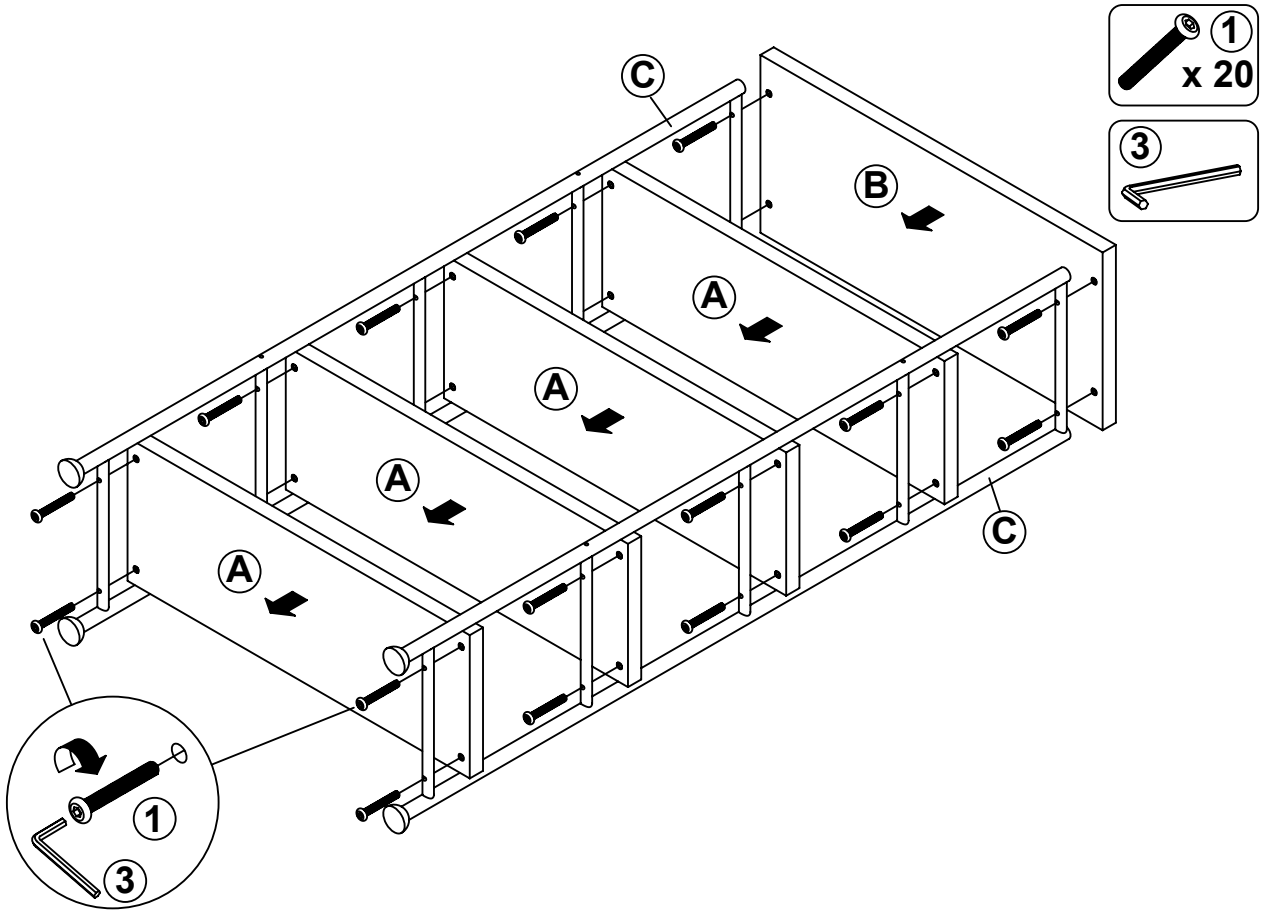

STEP 2

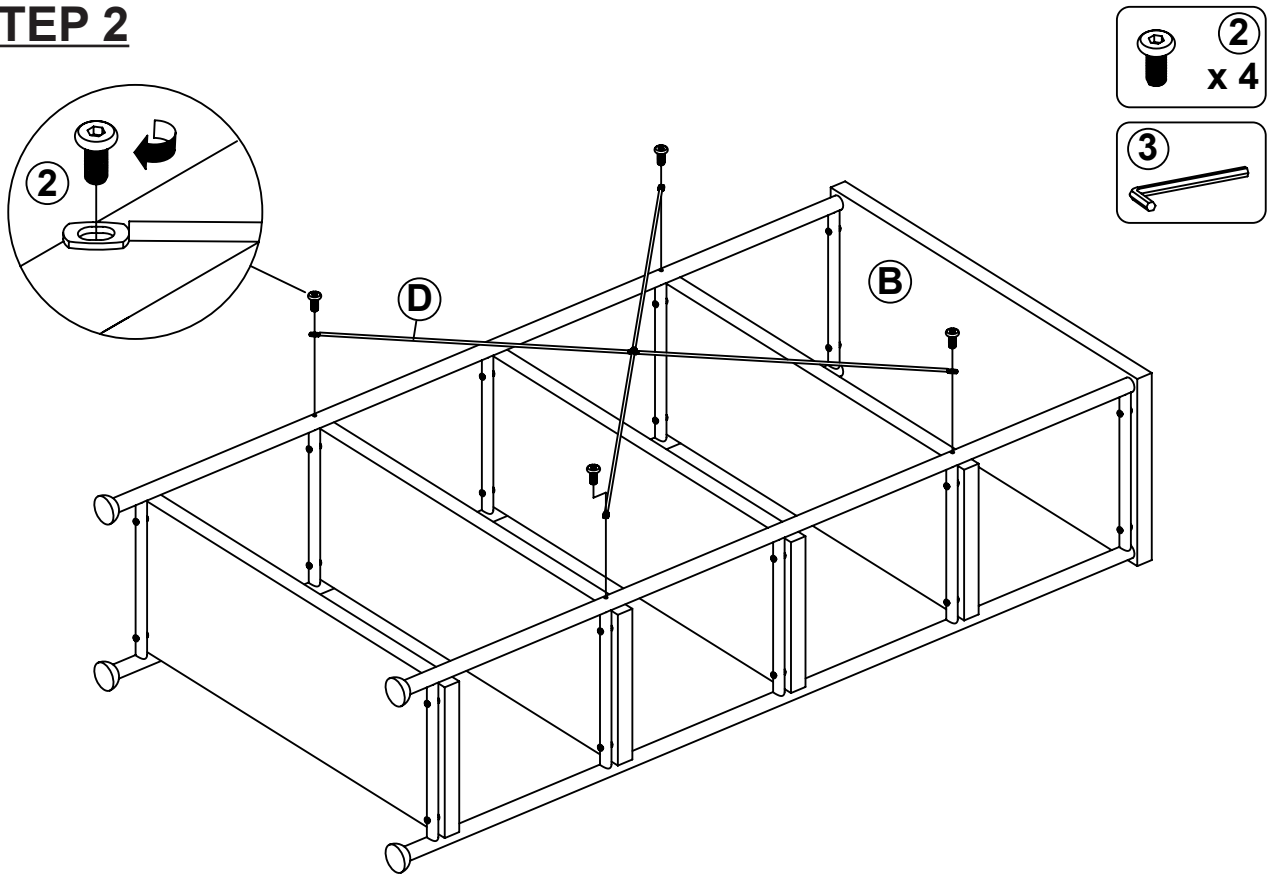

ITEM:**802543**

STEP 3

COMPLETE

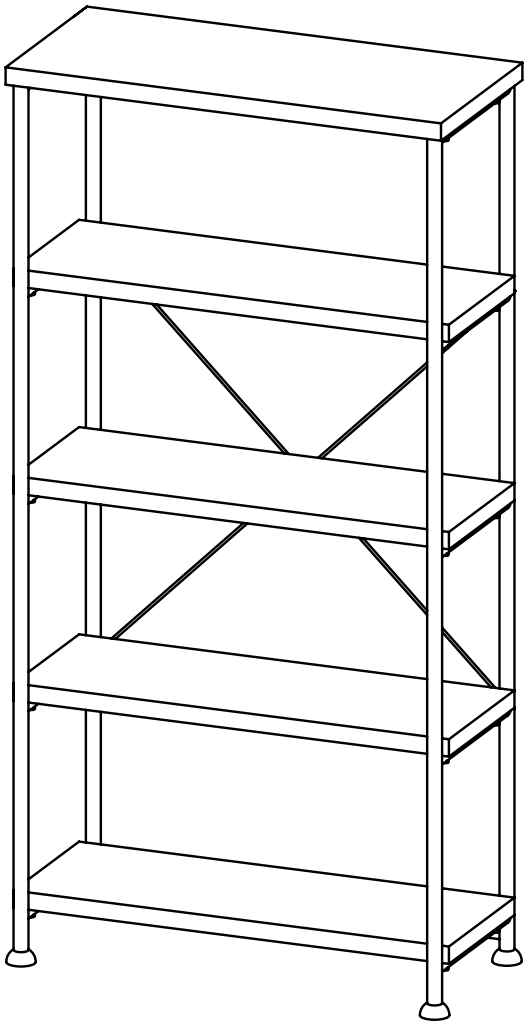

ITEM:**802543**

COASTER
FINE FURNITURE

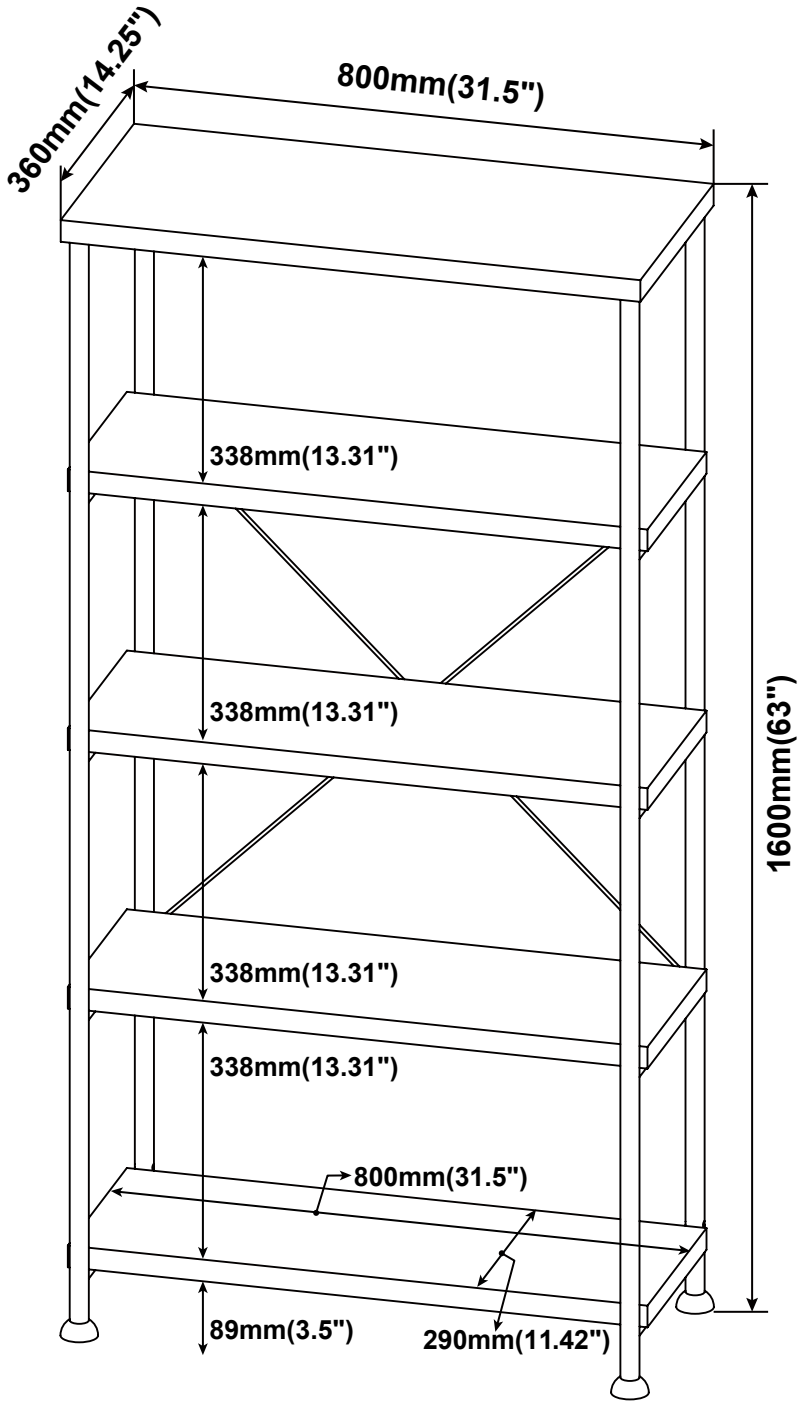

Note : Dimension tolerance ±5%

ANTI-TIPPING INSTALLMENT INSTRUCTIONS

FURNITURE TIPPING RESTRAINT

WARNING

Injury may result from tipping furniture.
This restraint may protect against tipping furniture.
Do not allow children to climb on furniture.
This restraint is not a substitute for proper adult supervision.
Failure to detach this restraint before moving the furniture
may result in injury and damage.

1. To attach the anti-tip strap, securely mount one end to the top of the case piece with the 5/8” screw.
2. Position the case piece against the wall in the desired location.
3. Pull the anti-tip strap taut and mark the position of where you will secure the other end on the wall.
4. Drill a 1-1/4” hole in the spot you marked.
5. Tap in plastic wall plug.
6. Fasten anti-tip strap with wall screw provided.
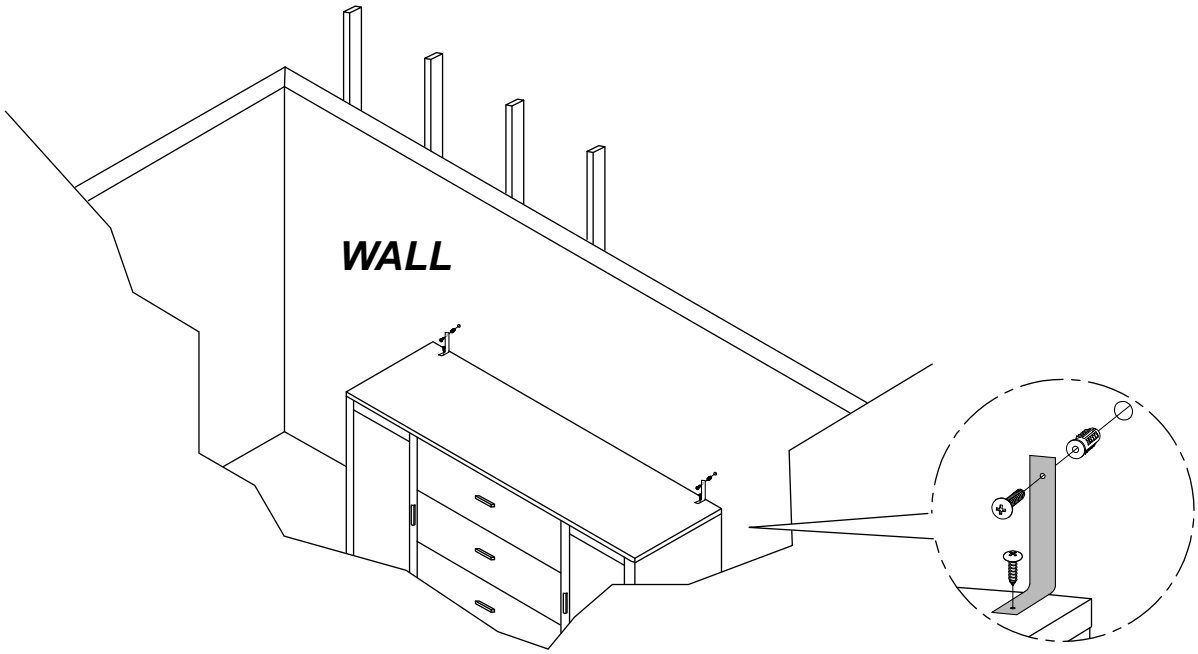
(Please install the anti-tiping kit in the middle of the case piece if only have one set of anti-tipping kit.)