COASTER®
FINE FURNITURE

950367

ACCENT CABINET

ASSEMBLY INSTRUCTIONS
COASTER FINE FURNITURE

www.coastercompany.com

REVISION 0 : 08/07/2015
REVISION 1 : 07/07/2017
REVISION 2 : 09/19/2017

ANTI-TIPPING KIT

PARTS IDENTIFICATION

AN ACCENT CABINET 1 PC

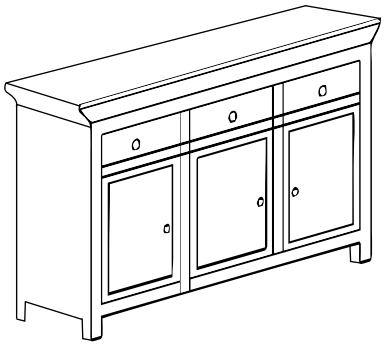

HARDWARE IDENTIFICATION

1		PLASTIC BRACKET	4 PCS
2		CABLE TIE	2 PC
3		LONG SCREW	4 PCS
4		SHORT SCREW	4 PCS
5		PLASTIC ANCHOR	4 PCS
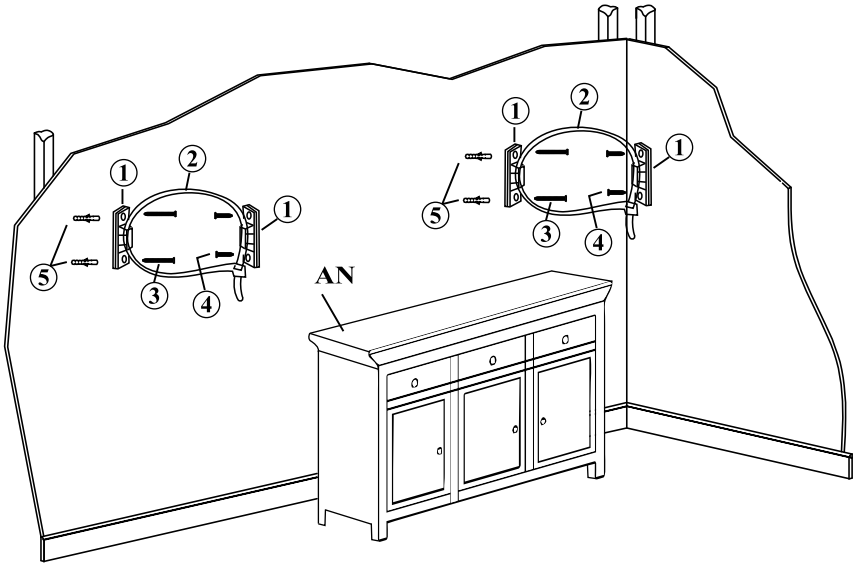
1.1 Attach one of the mounting brackets securely to the back edge of the cabinet. Use the short screw.
1.2 Determine where the cabinet is to be placed and mark location on the wall for the mounting bracket screw hole approximately 2" below the bracket mounted on the edge of the cabinet.
1.3 Drill a 3/16" hole in the wall. Press the plastic anchor into the hole and gently tape until the flange on the anchor is against the wall surface.
1.4 Position the bracket over the anchor and use the long screw to securely attach the bracket to the wall.
1.5 Place the cabinet so the bracket on the back edge is in line with the bracket on the wall.
1.6 Lace an end of the cable tie down through each bracket. Bring both ends together and slide the beaded end of the cable tie through the keyhole shaped slot on the other end until snug. Pull down on the beaded end until it snap locks into the keyhole slot.
1.7 To double lock return the beaded end back through the keyhole as shown.
1.8 Check to make sure the cable tie is securely laced and locked to the brackets.