COASTER®
FINE FURNITURE

ASSEMBLY INSTRUCTIONS
COASTER FINE FURNITURE

Fine Furniture for every stage of life

800830
WRITING DESK

REVISION 0 : 09/22/2017
REVISION 1 : 10/01/2019

COASTERFURNITURE.COM

ITEM:800830

ASSEMBLY INSTRUCTIONS

COASTER FINE FURNITURE

ASSEMBLY TIPS:

1. Remove hardware from box and sort by size.
2. Please check to see that all hardware and parts are present prior to start of assembly.
3. Please follow attached instructions in the same sequence as numbered to assure fast & easy assembly.

WARNING!

1. Don't attempt to repair or modify parts that are broken or defective. Please contact the store immediately.
2. This product is for home use only and not intended for commercial establishments.

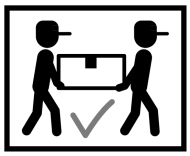

ASSEMBLY TIME | 60 MINUTES

PARTS IDENTIFICATION

A	TOP BOARD	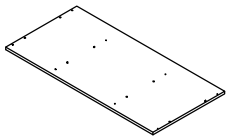	1PC
B	LEFT BOARD	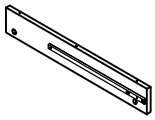	1PC
C	RIGHT BOARD	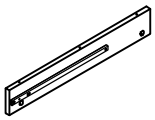	1PC
D	LEFT MIDDLE BOARD	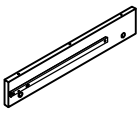	1PC
E	RIGHT MIDDLE BOARD	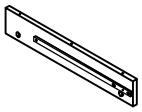	1PC
F	BACK BOARD	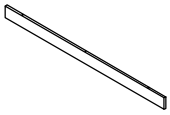	1PC

ITEM:800830

ASSEMBLY INSTRUCTIONS

PARTS IDENTIFICATION

G	BOTTOM BOARD	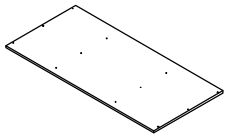	1PC
H	DRAWER FRONT PANEL	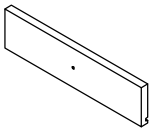	2PCS
I	DRAWER LEFT PANEL	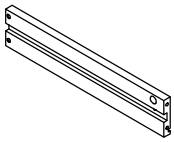	2PCS
J	DRAWER RIGHT PAENL	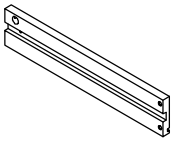	2PCS
K	DRAWER BACK PANEL	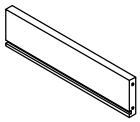	2PCS
L	DRAWER BOTTOM PANEL	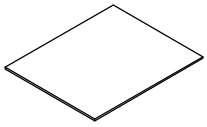	2PCS
M	SUPPORT PANEL	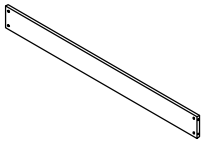	1PC

ITEM:800830

ASSEMBLY INSTRUCTIONS

PARTS IDENTIFICATION

N	SUPPORT CROSSBAR	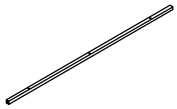	2PCS
O	SIDE GLASS	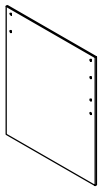	2PCS
P	PLASTIC BAR		2PCS

ITEM:800830

ASSEMBLY INSTRUCTIONS

HARDWARE IDENTIFICATION

1	CAM BOLT (38mm)		12PCS
2	LARGE CAM LOCK (ϕ15mm)		8PCS
3	SMALL CAM LOCK (ϕ12mm)		4PCS
4	LARGE WOOD DOWEL (8 x 30mm)		14PCS
5	SMALL WOOD DOWEL (6 x 30mm)		4PCS
6	DOOR KNOB (ϕ22 x 25mm)		2PCS
7	LONG SCREW (ϕ8 x 38mm)		20PCS
8	SHORT HANDLE SCREW (ϕ8 x 12mm)		4PCS
9	LONG HANDLE SCREW (ϕ8 x 21mm)		2PCS
10	SHORT BOLT (1/4" x 21mm SR)		4PCS
11	MEDIUM BOLT (1/4" x 28mm SR)		6PCS
12	LONG BOLT (1/4" x 38mm SR)		4PCS
13	LARGE PLASTIC WASHER (ϕ32mm)		16PCS
14	SMALL PLASTIC WASHER (ϕ15mm)		4PCS
15	WASHER (ϕ13mm)		8PCS
16	CYLINDER NUT (ϕ35mm)		8PCS
17	DENTAL-WROUGHT (1/4" x 38mm)		4PCS
18	CAP (20 x 20mm SR)		4PCS
19	NUT (ϕ9.5 x 13mm)		4PCS
20	GLUE		1PC
21	ALLEN WRENCH (4mm)		1PC

ITEM:800830

ASSEMBLY INSTRUCTIONS

STEP 1

Do not tighten until each step is completed or instructed.

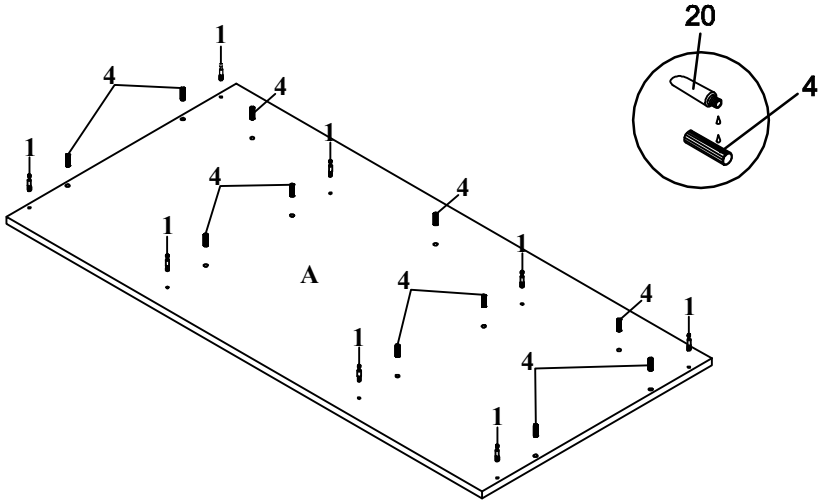

STEP 2

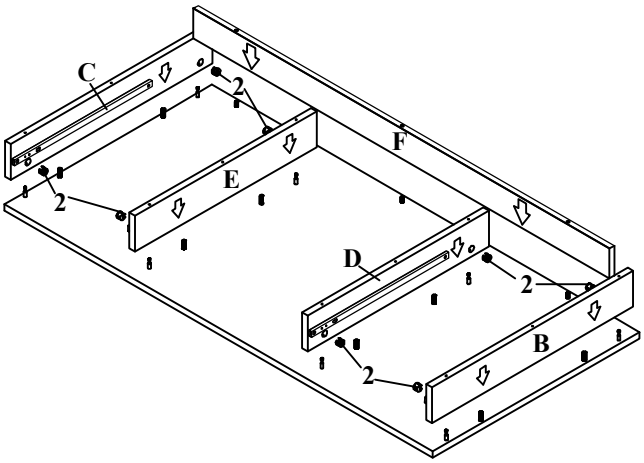

ITEM:800830

ASSEMBLY INSTRUCTIONS

STEP 3

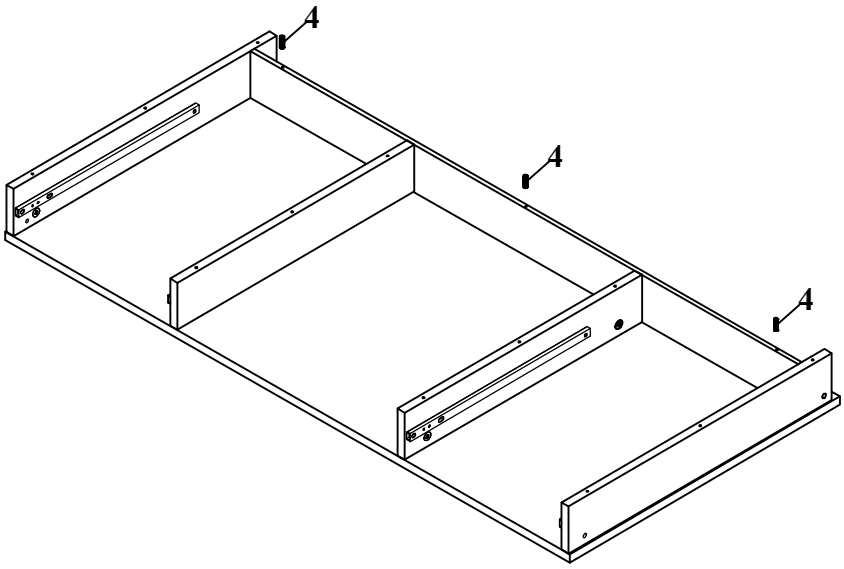

STEP 4

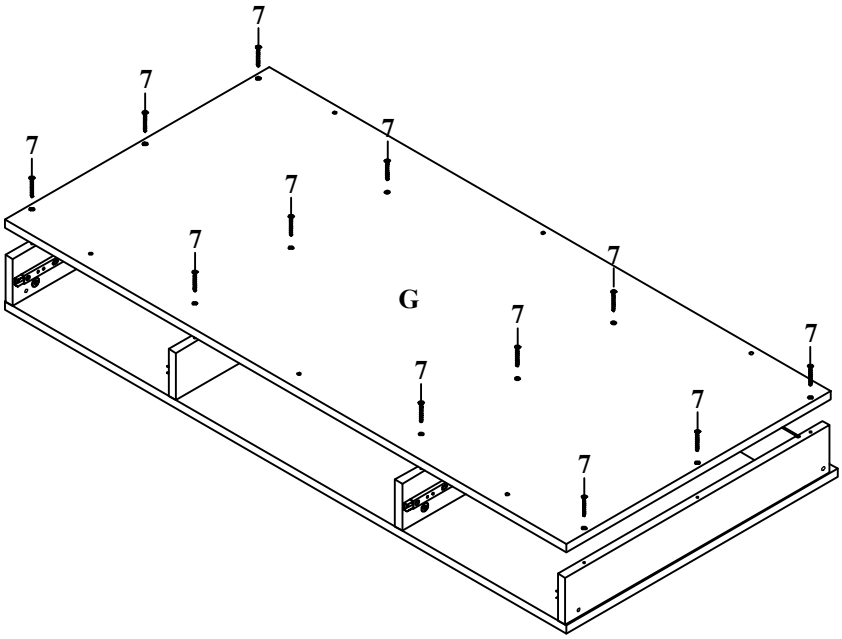

ITEM:800830

ASSEMBLY INSTRUCTIONS

STEP 5

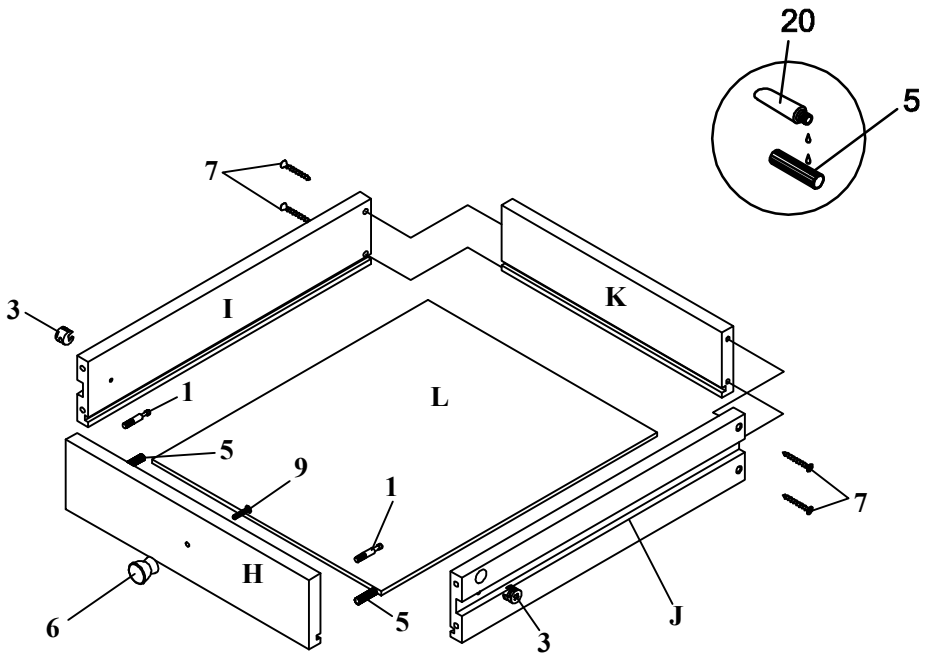

STEP 6

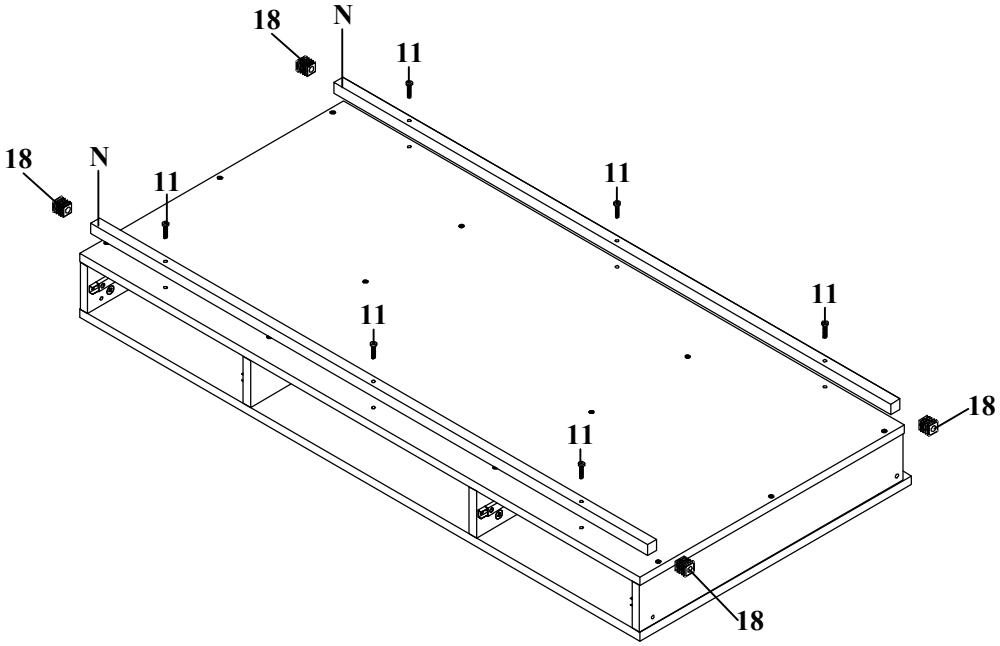

ITEM:800830

ASSEMBLY INSTRUCTIONS

STEP 7

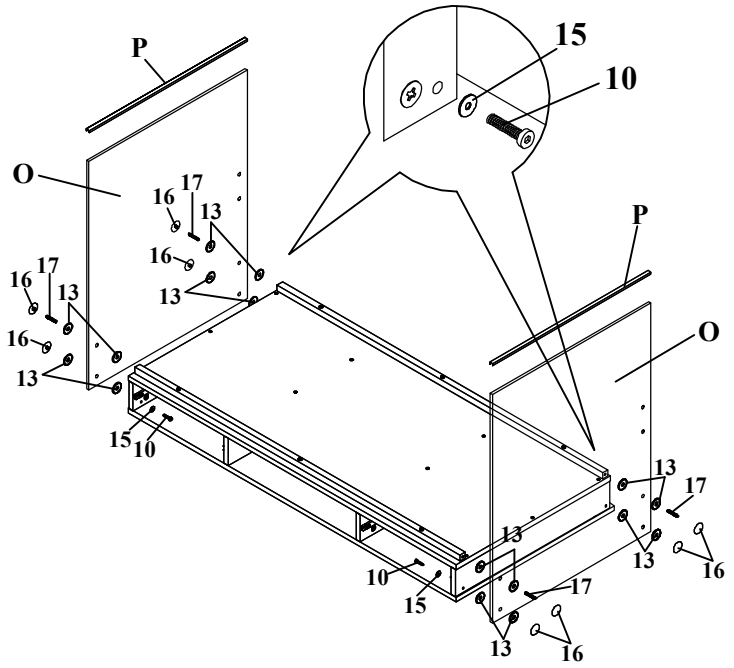

STEP 8

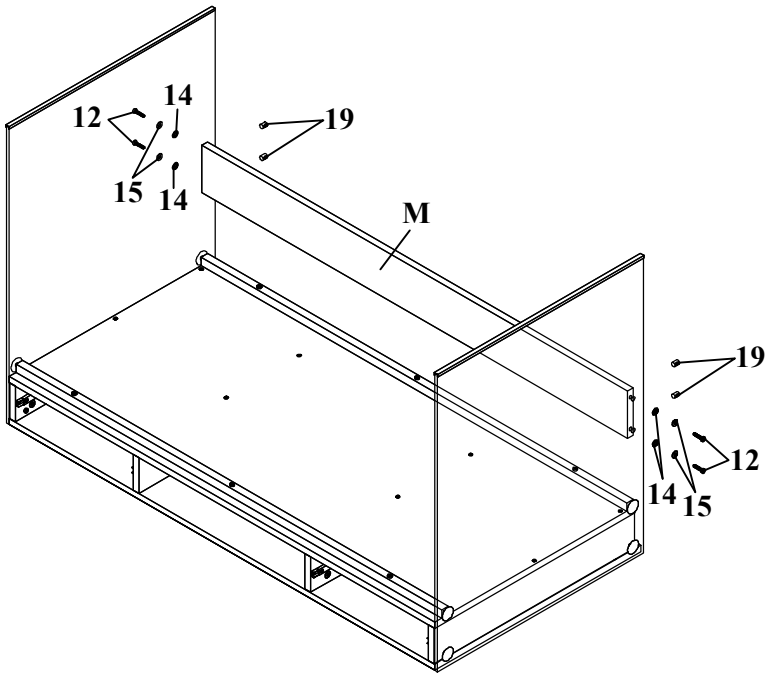

ITEM:800830

ASSEMBLY INSTRUCTIONS

STEP 9

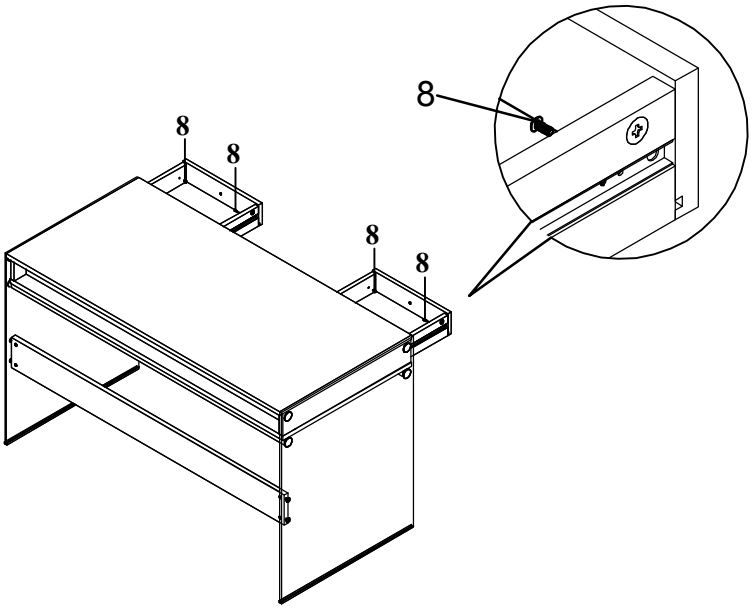

STEP 10
COMPLETE

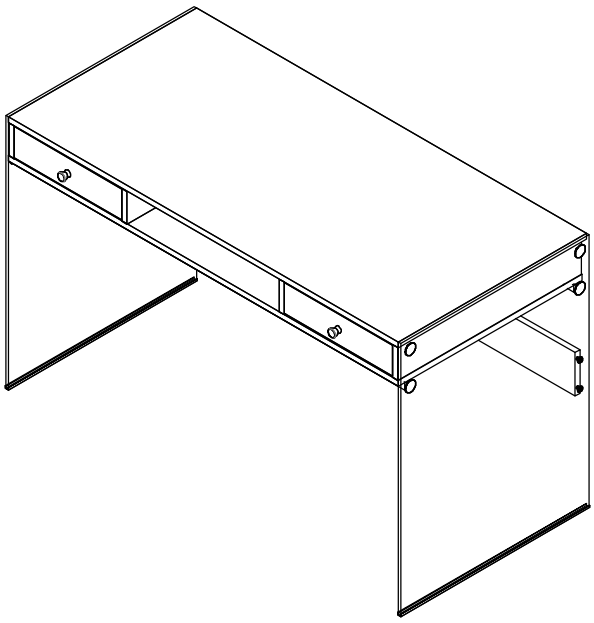

ITEM: 800830

ASSEMBLY INSTRUCTIONS

Product Size : 1219 X 597 X 749 H (MM)
Product Size : 48" X 23 $\frac{1}{2}$" X 29 $\frac{1}{2}$"

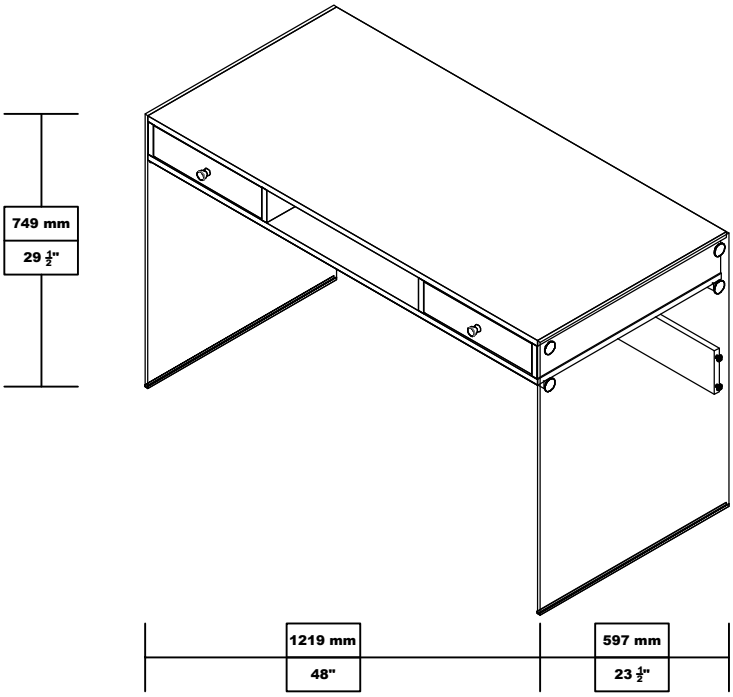

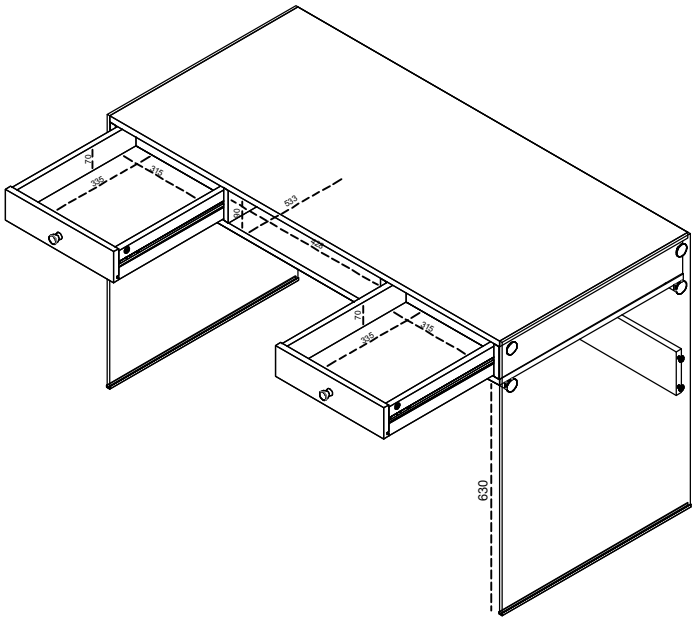

Note : Dimension tolerance ±5%