CROSLEY
FURNITURE

Bench
CO7381

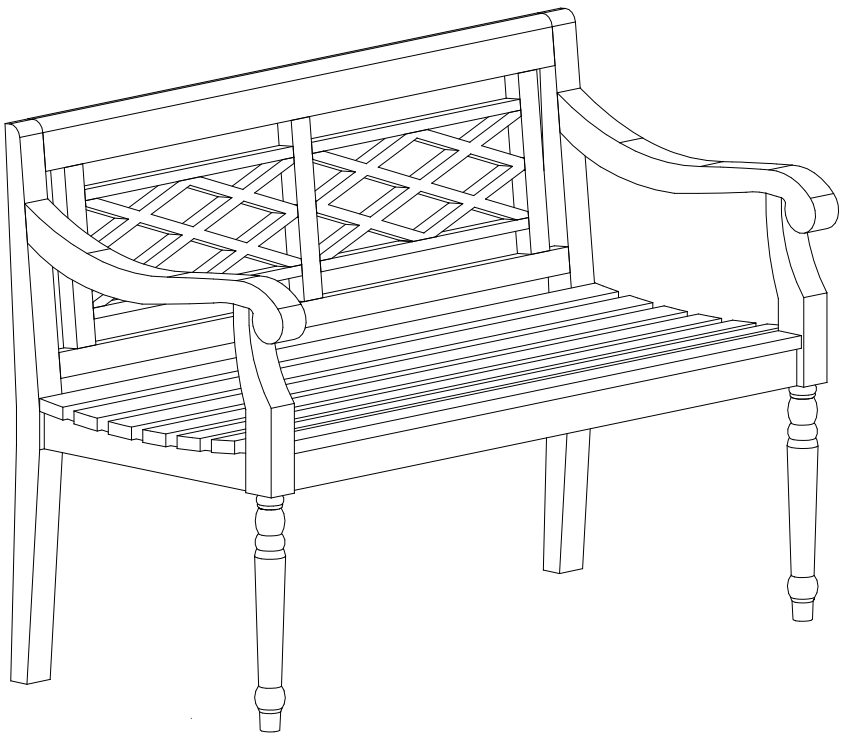

PART LIST

A	B	C
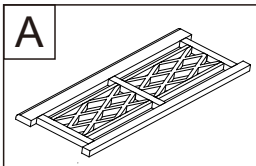	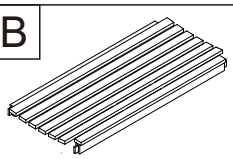	
Backrest 1 PC	Seat Panel 1 PC	Leg 2 PCS

HARDWARE LIST

#1	#2	#3
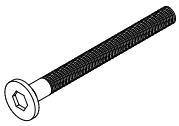 M6 X 50	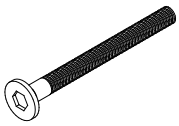 M6 X 40	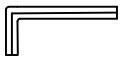
Long Bolt 8 PCS (Extra 1)	Short Bolt 4 PCS (Extra 1)	Allen Wrench 1 PC

Step 1. Lay down leg (part C) on a flat, soft surface, such as carpet. Insert backrest (part A) and seat panel (part B) to connecting holes in leg (part C). Attach leg (part C) to assembled unit (parts A & B) using short bolts (part #2) and allen wrench (part #3) on both sides.

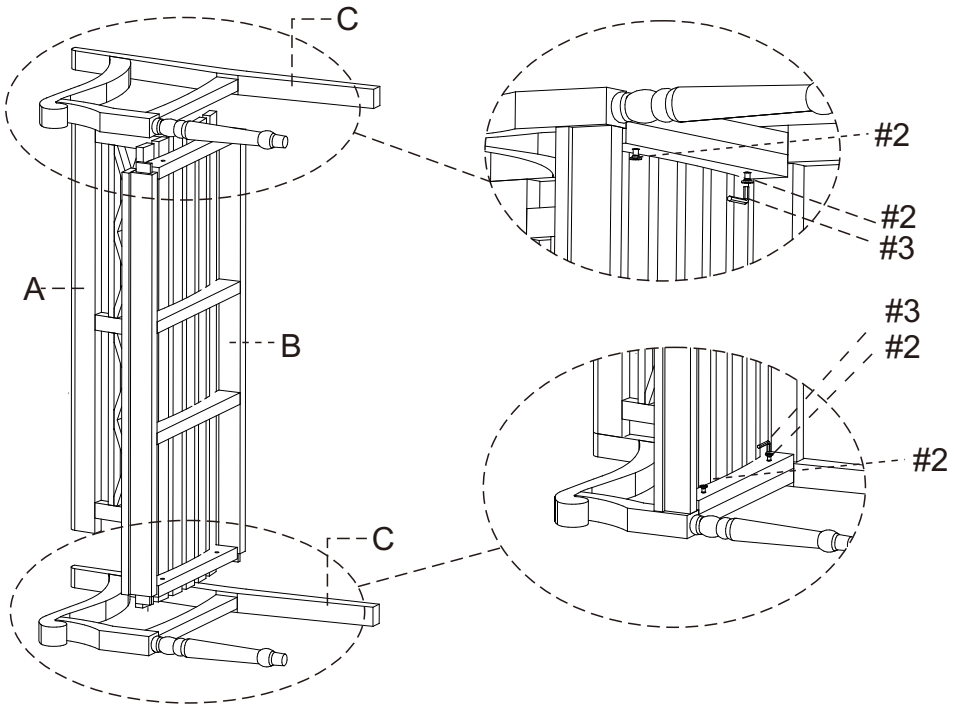

#2 x 4
#3 x 1

Step 2. Carefully turn unit upright. Tighten long bolts (part #1) to assembled unit (parts A & B) using allen wrench (part #3).
Note: Please do not overtighten the bolts.

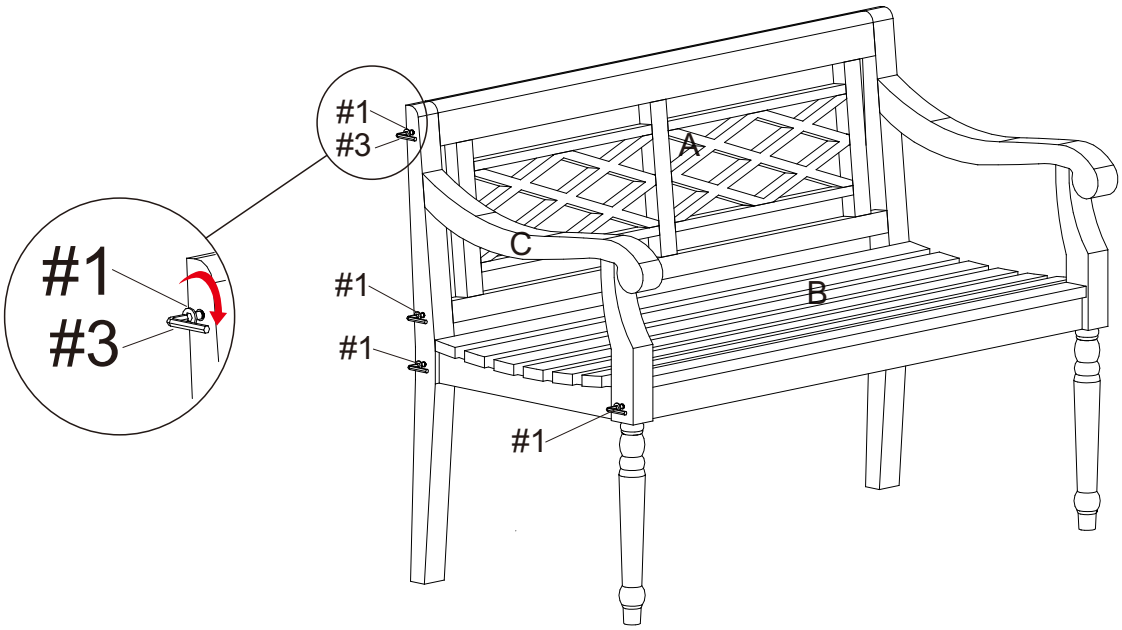

#1 x 8
#3 x 1