BUTLER

SPECIALTY COMPANY
8200 SOUTH CHICAGO AVE. CHICAGO, IL 60617

Assembly Instructions
5258288 & 5258291
Campaign End Table

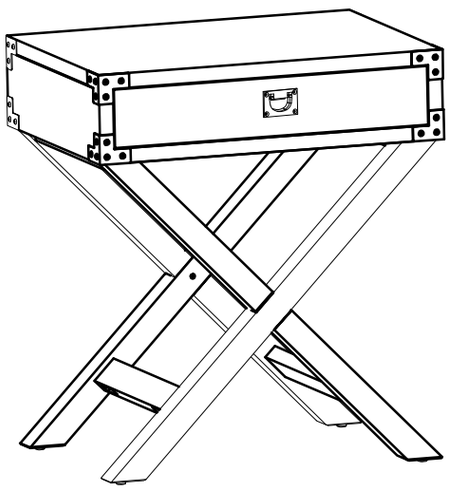

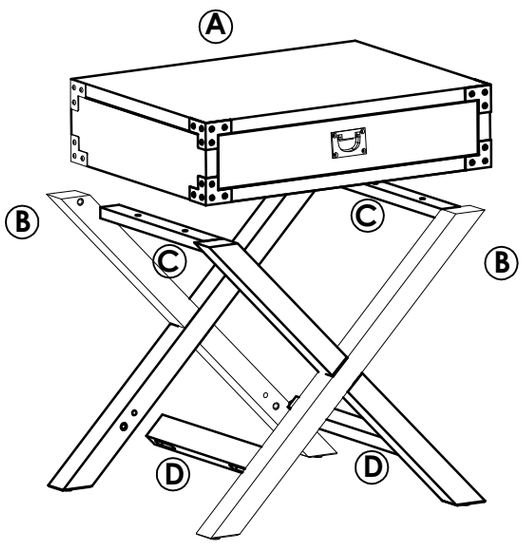

ITEM	DESCRIPTION	QUANTITY
A	Table Top	1
B	Leg	2
C	Base Rail	2
D	Stretcher	2

hardware

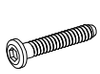

H1 x 4
bolts m6 x 40mm

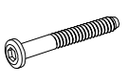

H2 x 8
bolts m6 x 45mm

H3 x 12
flat washers ∅ 13

H4 x 12
spring washers ∅ 13

H5 x 1
Allen key #4

STEP 1

Lay the Table Top (A) Upside down , Attach the Base Rail (C) onto Table Top (A) then secure Table Top (A) and Base rail (C) using Bolts (H1) , Flat Washer (H3) and Spring Washer (H4) .Half tighten the Bolts (H1) with supplied Allen Key (H5)

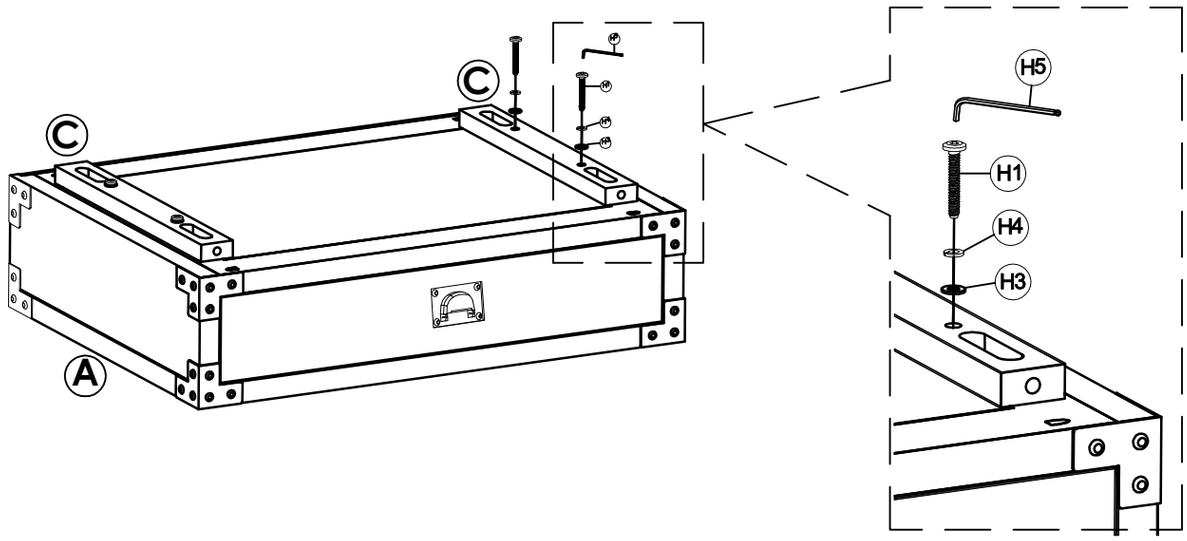

STEP 2

Attach the Leg (B) to the Base Rail (C) , then secure with Bolts (H2) , Flat Washer (H3) and Spring Washer (H4) . Half tighten the Bolts (H2) with supplied Allen Key (H5)

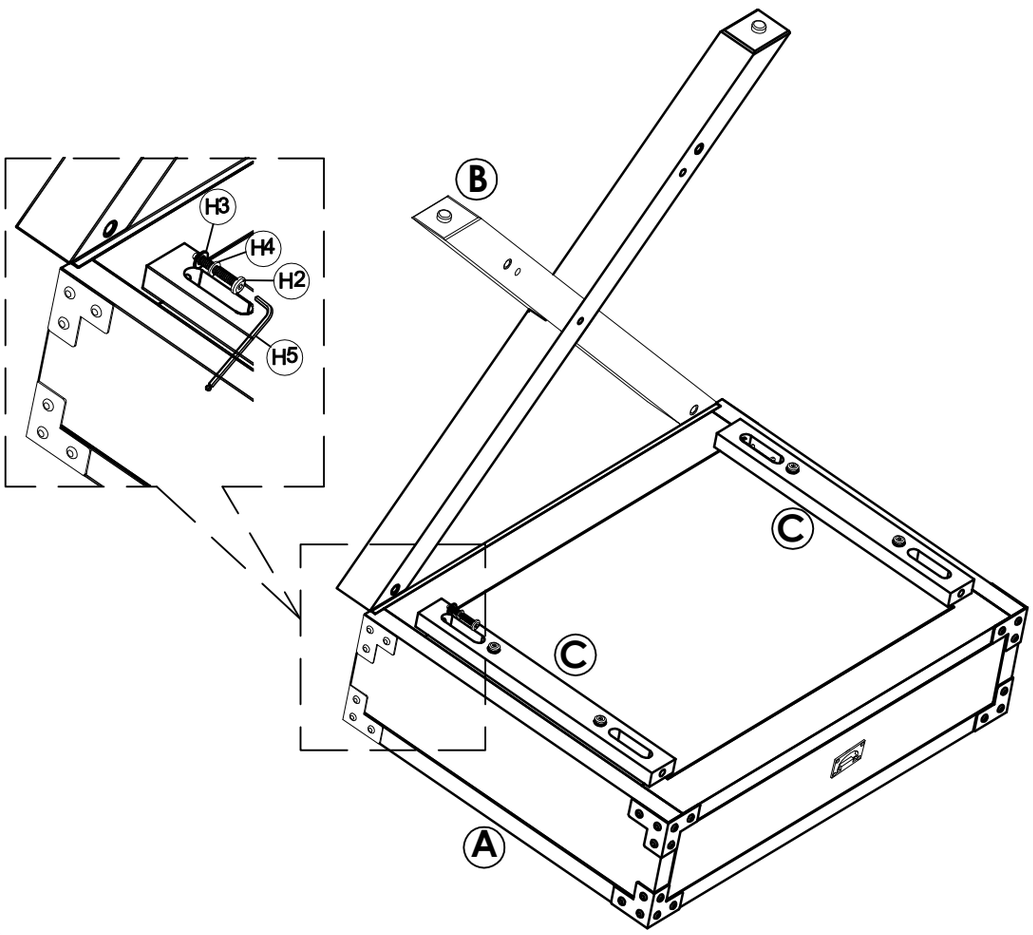

STEP 3

Attach the Strecher (D) to Leg (B) by lines up dowel into corresponding hole on the Leg (B) , then secure with Bolts (H2) ,Flat Washer (H3) and spring Washer (H4) . Half tighten the Bolts (H2) with supplied Allen Key (H5)

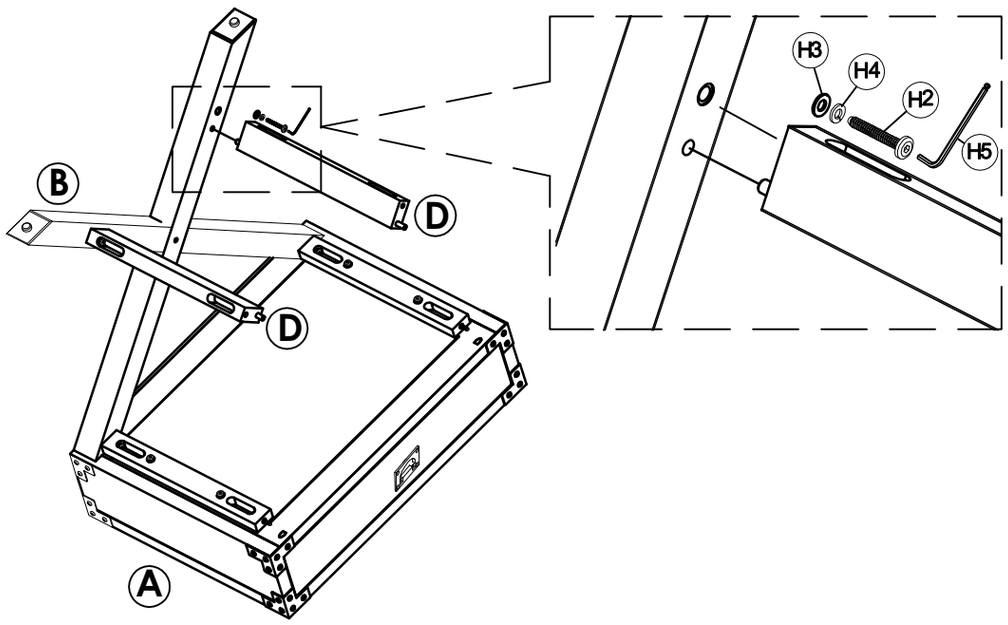

STEP 4

Attach the Leg (B) to the Strecher (D) then lines up dowels to corresponding holes on the Leg (B) , then secure Top table (A) , Stretcher (D) and Leg (B) using Bolts (H2) , Flat Washer (H3) and spring Washer (H4) Fully tighten all the Bolts (H2) with supplied Allen Key (H5)

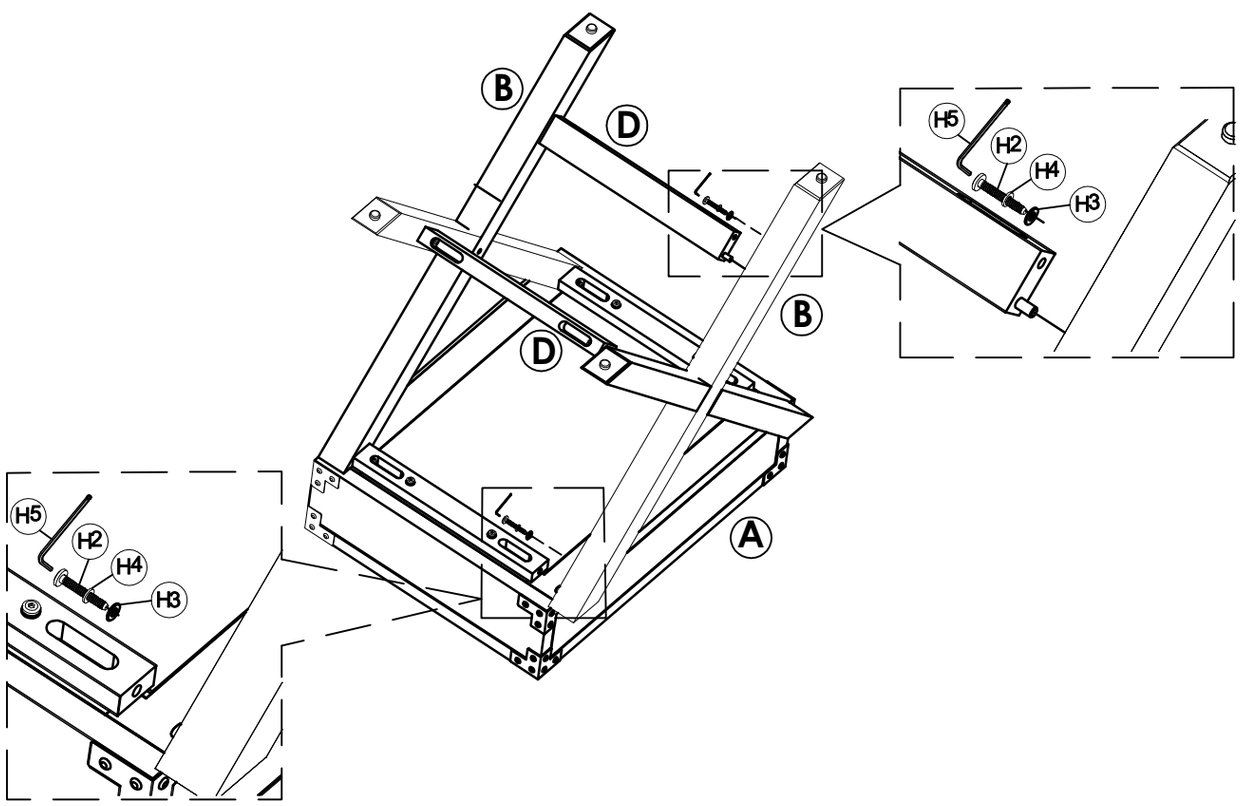

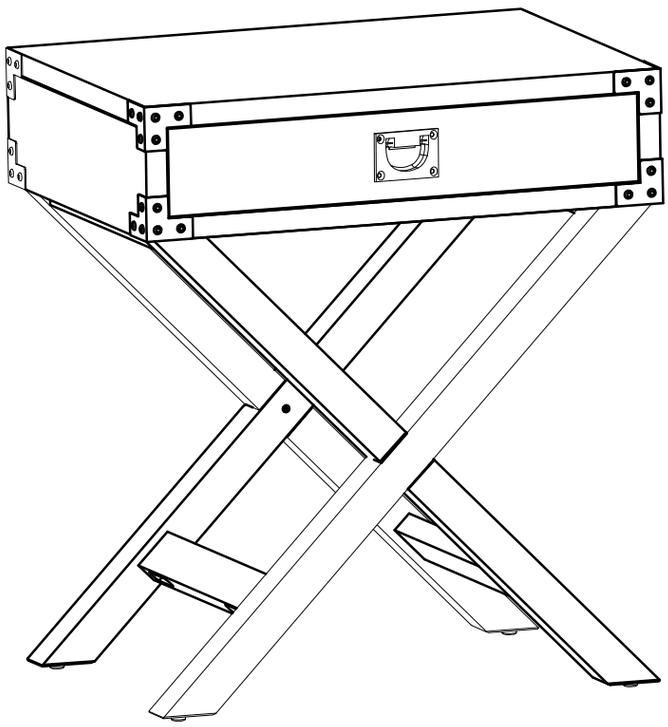

Congratulations
Assembly complete, Your Campaign End Table is ready to use

(*) Caution : DO NOT OVERTIGHTEN

In any correspondence regarding this product, please include the complete Butler identification number located on the underside of the product.

We hope this product will be a useful and decorative addition to your home for years to come

Copyright© Butler Specialty Company, 9 / 20